# Saddle 560/450

Saddle for straight air duct segment



| | Unit of measurement | Saddle 560/450 |
|---|---|---|

## Dimensions

| d1 | d2 | l |
|---|---|---|
| 450 | 560 | 80 |

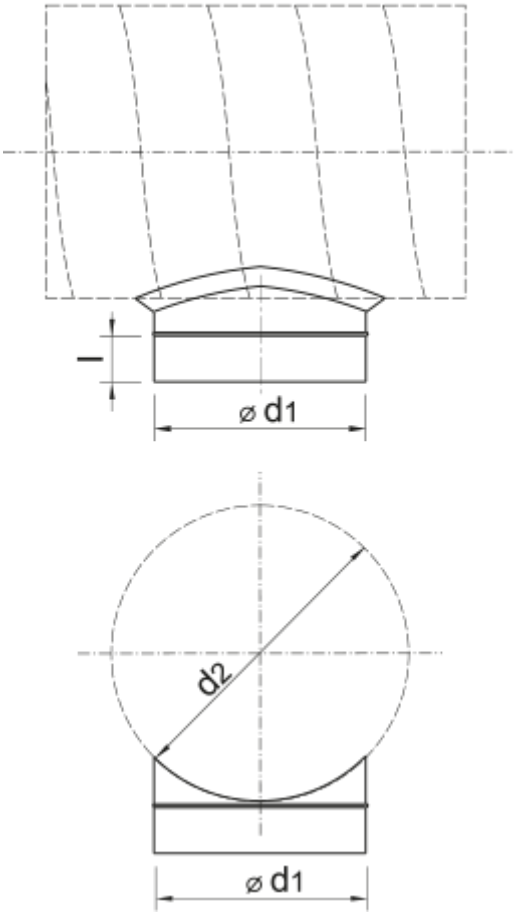
l
⌀ d1
d2
⌀ d1