# Saddle 600/355

Saddle for straight air duct segment



| | Unit of measurement | Saddle 600/355 |
|---|---|---|

## Dimensions

| d1 | d2 | l |
|---|---|---|
| 355 | 600 | 80 |

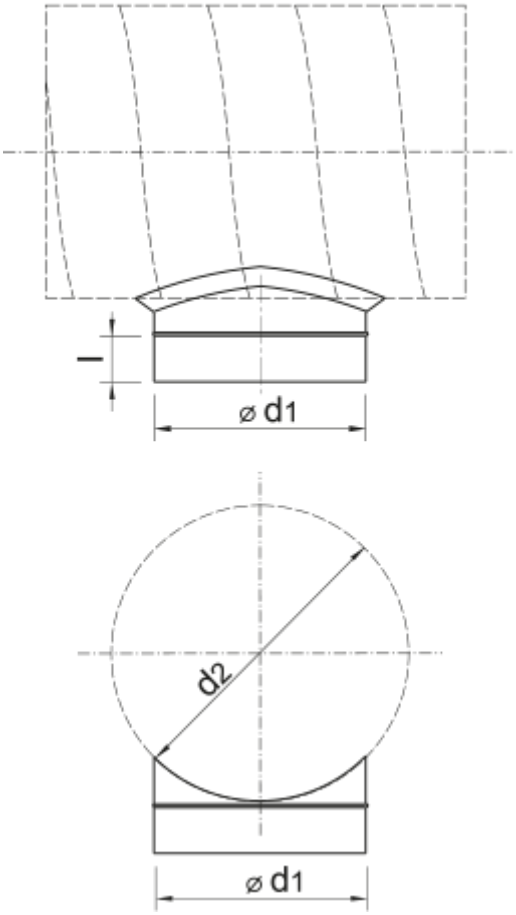
l
⌀ d1
d2
⌀ d1