Saddle 630/355

Saddle for straight air duct segment



	Unit of measurement	Saddle 630/355

Dimensions

d1	d2	l
355	630	80

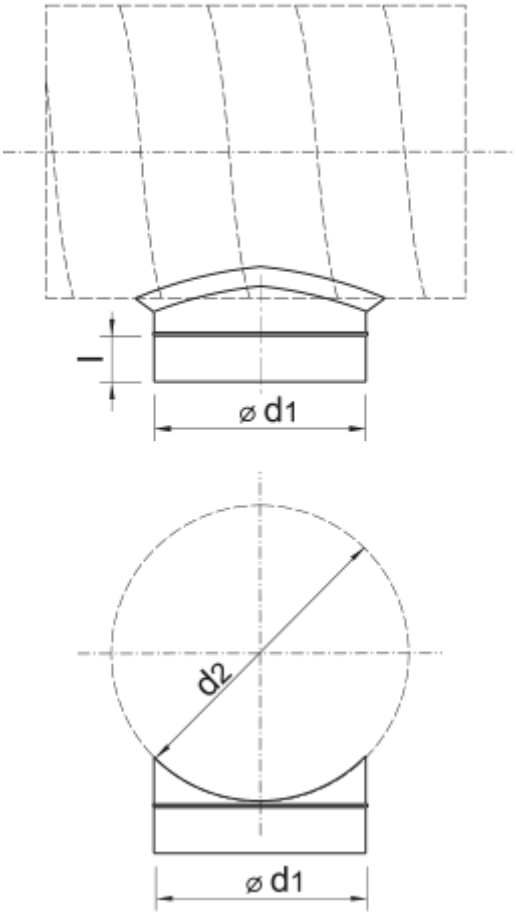
l
⌀ d1
d2
⌀ d1