Saddle 710/600

Saddle for straight air duct segment



	Unit of measurement	Saddle 710/600

Dimensions

d1	d2	l
600	710	80

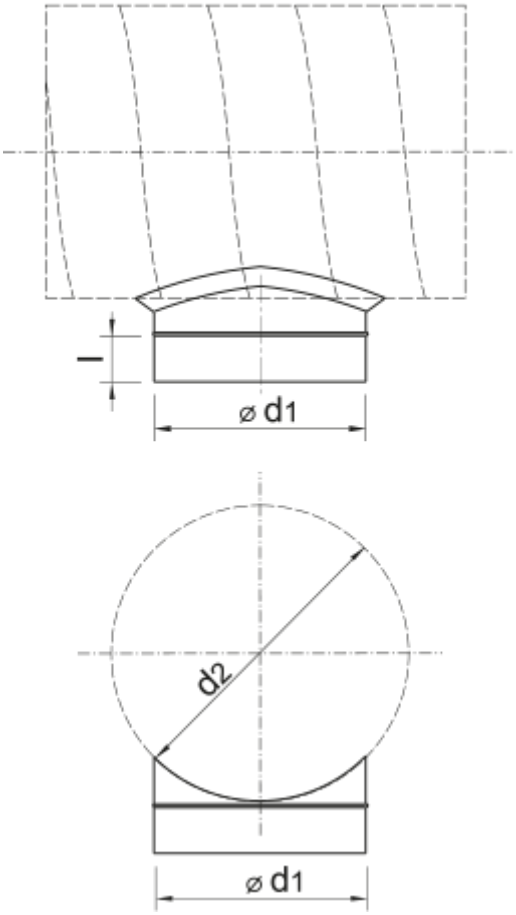
l
⌀ d1
d2
⌀ d1