Saddle 710/630

Saddle for straight air duct segment



	Unit of measurement	Saddle 710/630

Dimensions

d1	d2	l
630	710	80

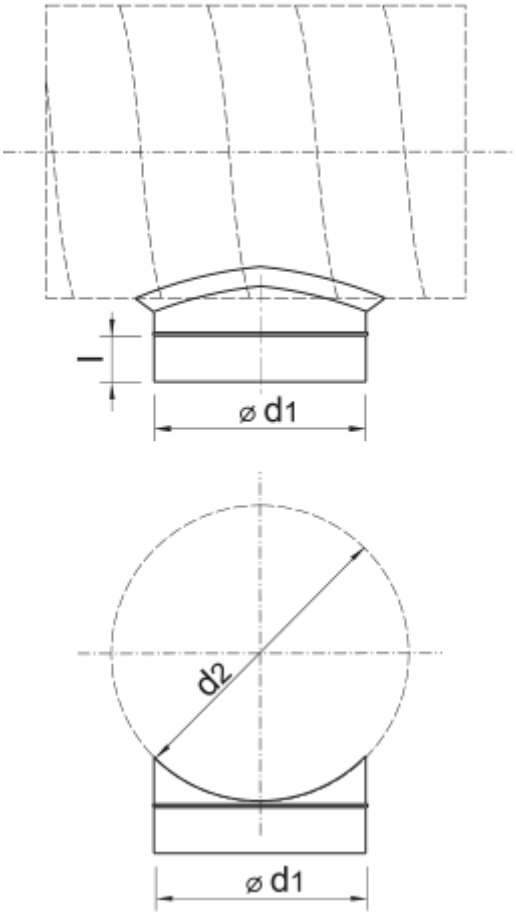
l
⌀ d1
d2
⌀ d1