Saddle 710/710

Saddle for straight air duct segment



	Unit of measurement	Saddle 710/710

Dimensions

d1	d2	l
710	710	80

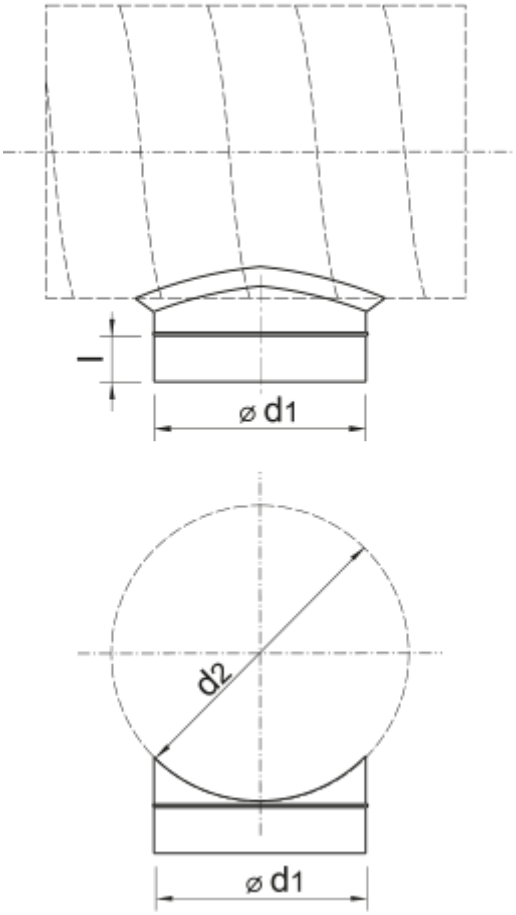
l
⌀ d1
d2
⌀ d1