TT Silent-M 100 R1



Mixed-flow inline fans in sound-insulated casing

- Sound pressure level LpA at 3 m: 27
- Sound-insulated casing
- Impeller type: Mixed-flow
- Casing material: Coated steel
- Installation in any position
- Cable with mains plug

	Unit of measurement	TT Silent-M 100 R1		
Speed	-	1	2	3
Connected air duct size	mm	100		
Phases	-	1		
Minimum supply voltage	V	230		
Maximum supply voltage	V	230		
Power supply frequency	Hz	50/60		
Rated power	W	9	12	23
Unit current	A	0.08	0.09	0.10
Maximum airflow	m³/h	100	140	240
Rotation speed at 50hz	-	1695	2424	2785
Sound pressure level LpA at 3 m	dB(A)	16	21	27
Weight	kg	4.7		
Transported air temperature (max)	°C	60		
Ingress protection rating	-	IPX4		
Ingress protection rating of the drive	-	IPX4		
Impeller material	-	Plastic		

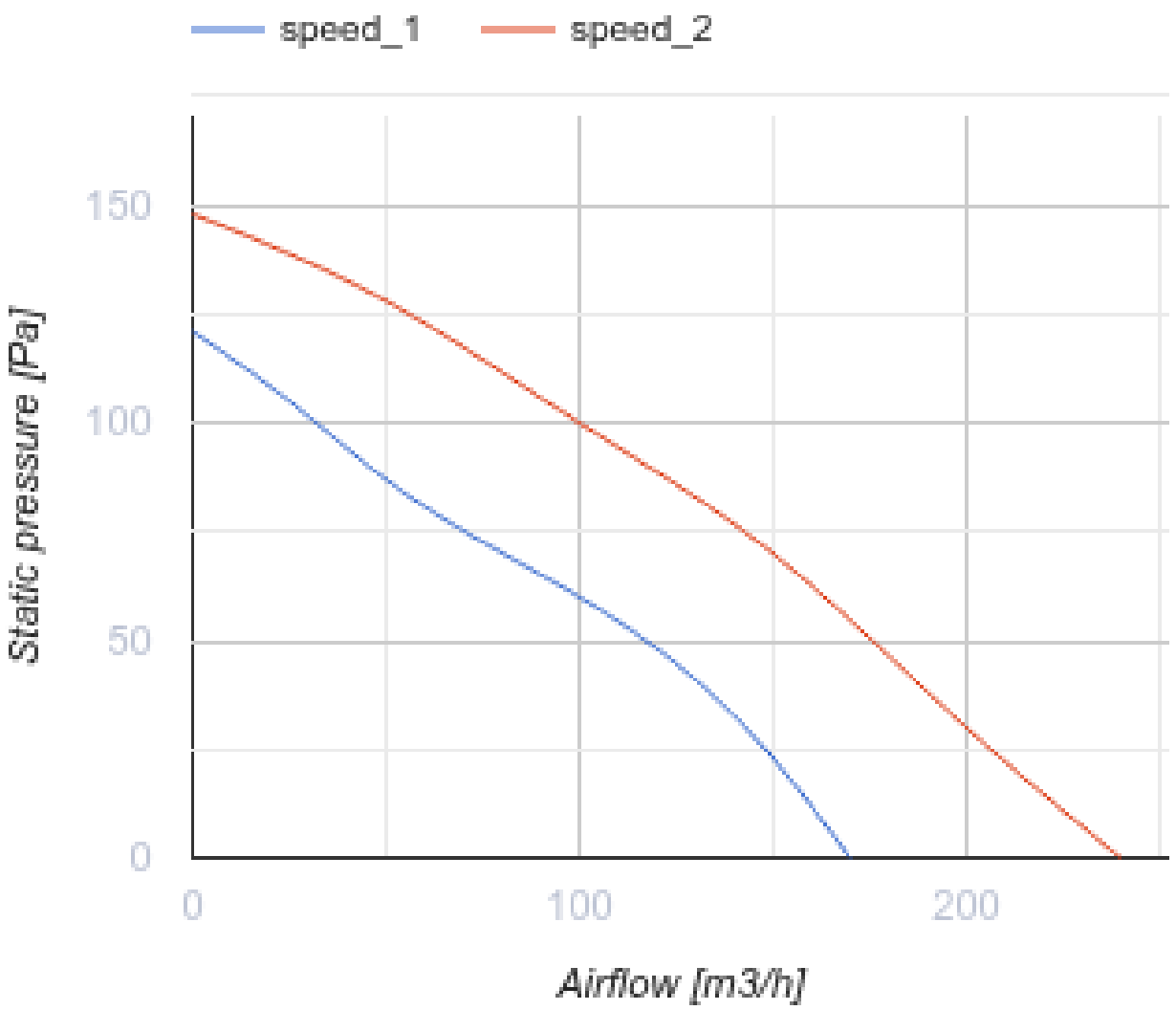
speed_1
speed_2
150
100
50
0
Static pressure [Pa]
0
100
200
Airflow [m3/h]

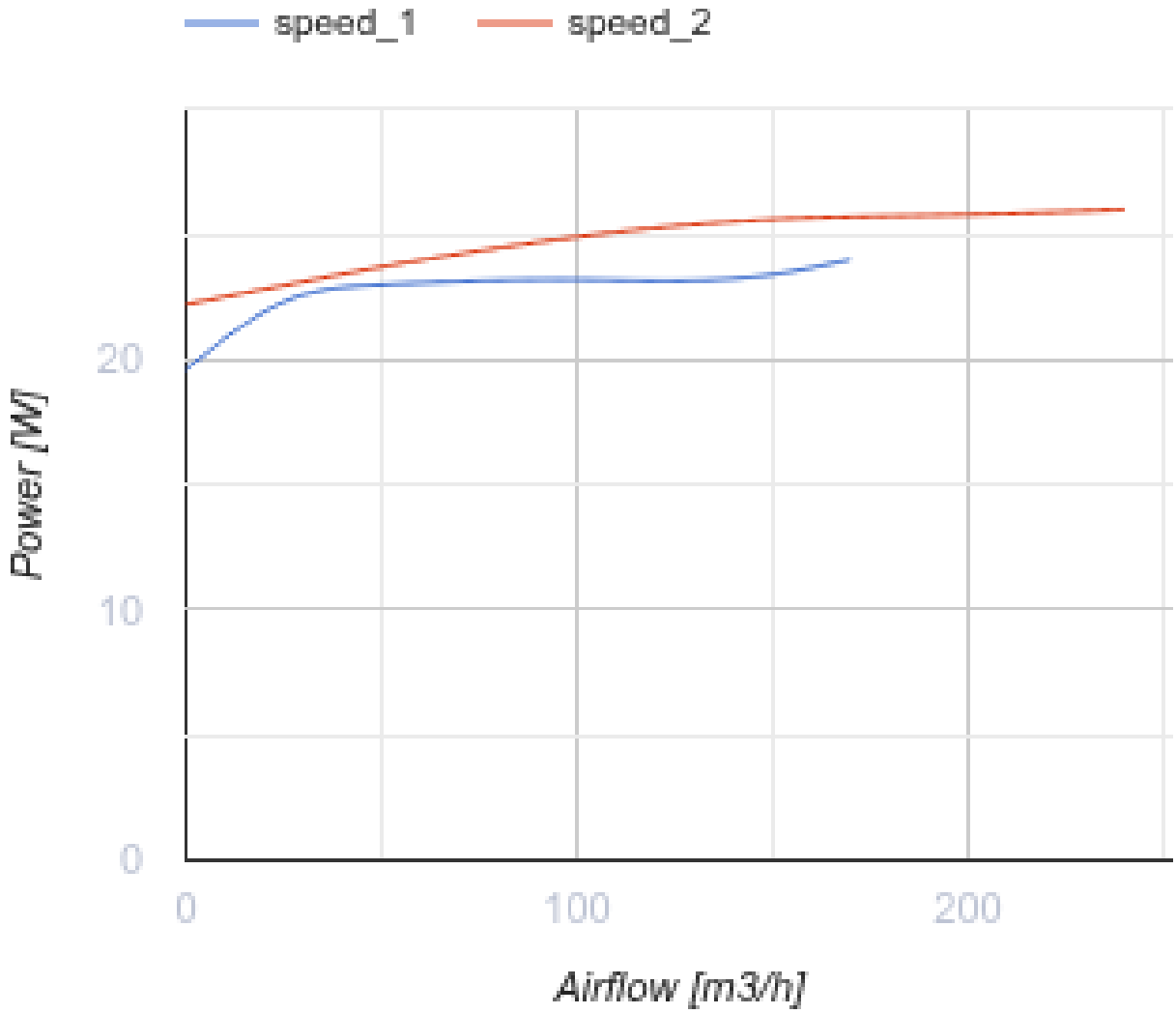

Dimensions

ØD	B	B1	H	L	L1
98	231	243	220	505	42

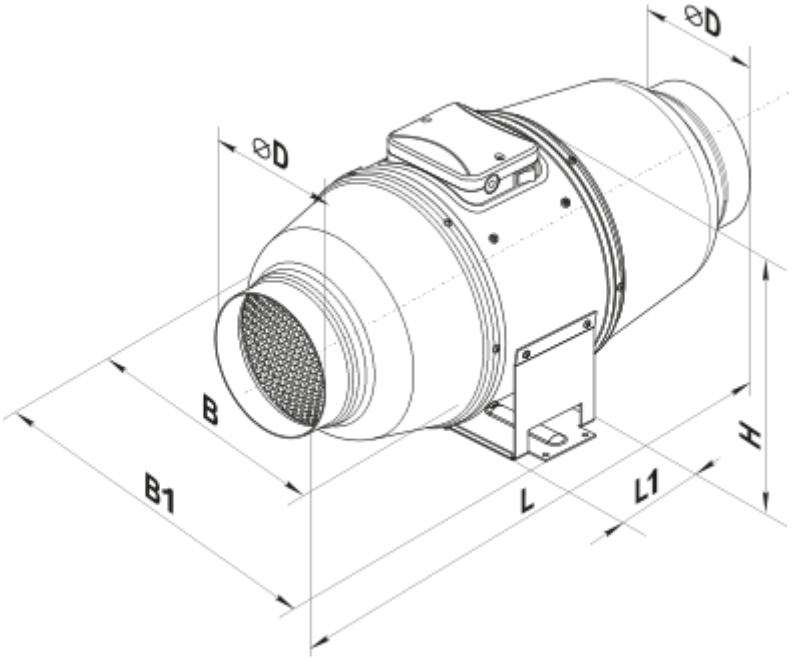

Accessories

For round ducts

Name	Photo	Description
SR 100/600		Silencers made of galvanized steel filled with non-combustible sound-absorbing material
SR 100/900		Silencers made of galvanized steel filled with non-combustible sound-absorbing material
SR 100/1200		Silencers made of galvanized steel filled with non-combustible sound-absorbing material
SRF 100/600		Silencers made of aluminium alloy filled with non-combustible sound-absorbing material
SRF 100/900		Silencers made of aluminium alloy filled with non-combustible sound-absorbing material
SRP 100/500		Silencers with an internal flexible air duct made of micro-perforated aluminium foil laminated with polyester film
SRP 100/600		Silencers with an internal flexible air duct made of micro-perforated aluminium foil laminated with polyester film
SRP 100/750		Silencers with an internal flexible air duct made of micro-perforated aluminium foil laminated with polyester film

SRP 100/900		Silencers with an internal flexible air duct made of micro-perforated aluminium foil laminated with polyester film
SRP 100/1200		Silencers with an internal flexible air duct made of micro-perforated aluminium foil laminated with polyester film
SRP 100/1500		Silencers with an internal flexible air duct made of micro-perforated aluminium foil laminated with polyester film
SRP 100/2000		Silencers with an internal flexible air duct made of micro-perforated aluminium foil laminated with polyester film

For round ducts

Name	Photo	Description
FB K2 100 G4/F8		Panel filters of a high purification level
FB K2 100 G4/C/F8		Panel filters of a high purification level
FB K2 100 G4/H13		Panel filters of a high purification level
FB K2 100 G4/C/H13		Panel filters of a high purification level
FB K2 100 ES		Panel electrostatic filters of a high purification level
FB 100		Round panel air filters
FBV 100		Round panel air filters with a large filtration area
FBK 100-4		Round bag air filters
FBK 100-5		Round bag air filters
FBK 100-7		Round bag air filters

For round ducts

Name	Photo	Description
KOM 100		Backdraught damper with spring-loaded plates for shutting off air flow in round air ducts
KOMu 100		Backdraught damper with spring-loaded plates for shutting off air flow in round air ducts
KOM1 100		Backdraught gravity damper for shutting off air flow in round air ducts
KR 100		Air dampers for controlling air flow in round air ducts
KRV 100		Air dampers for automatic air flow control in round ducts

For round ducts

Name	Photo	Description
VVG 100	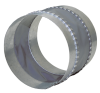	Flexible anti-vibration inserts for round ducts

Water heaters

Name	Photo	Description
NKV 100-2		Inline water supply air heaters or heater for air handling units with a round cross-section
NKV 100-4		Inline water supply air heaters or heater for air handling units with a round cross-section

Electrical heaters

Name	Photo	Description
NK 100-0,6-1		Round electric inline heaters with round cross-section
NK 100-0,8-1		Round electric inline heaters with round cross-section
NK 100-1,2-1		Round electric inline heaters with round cross-section

NK 100-1,6-1		Round electric inline heaters with round cross-section
NK 100-1,8-1		Round electric inline heaters with round cross-section

Ecodesign

Trademark	Vents					
Model	TT Silent-M 100 R1					
Specific energy consumption (SEC) (kWh/(m²/a))	Cold		Average		Warm	
	-53.7	A+	-26.6	B	-11.1	E
Type of ventilation unit	Unidirectional					
Type of drive installed	Multi-speed					
Type of heat recovery system	None					
Maximum flow rate (m³/h)	75					
Electric power input (W)	21					
Reference flow rate (m³/s)	0.027					
Reference pressure difference (Pa)	50					
Specific power input (SPI) (W/(m³/h))	0.125					
Control typology	Local demand control					
Maximum external leakage rates (%)	2.7					
Sound power level (dB(A))	47					
Declared typology	RVU UVU					
The annual electricity consumption (AEC) (kWh/a)	Cold		Average		Warm	
	66		66		66	
The annual heating saved (AHS) (kWh/a)	Cold		Average		Warm	
	5536		2830		1280	