TT Silent-M 125 Un



Mixed-flow inline fans in sound-insulated casing

- Sound pressure level LpA at 3 m: 25
- Sound-insulated casing
- Control: Built-in speed controller
- Impeller type: Mixed-flow
- Casing material: Coated steel
- Installation in any position
- Cable with mains plug
- Temperature sensor

	Unit of measurement	TT Silent-M 125 Un		
Speed	-	1	2	3
Connected air duct size	mm	125		
Phases	-	1		
Minimum supply voltage	V	230		
Maximum supply voltage	V	230		
Power supply frequency	Hz	50/60		
Rated power	W	9	12	23
Unit current	A	0.08	0.09	0.10
Maximum airflow	m³/h	155	214	340
Rotation speed at 50hz	-	1784	2473	2788
Sound pressure level LpA at 3 m	dB(A)	16	21	25
Weight	kg	4.6		
Transported air temperature (max)	°C	60		
Ingress protection rating	-	IPX4		
Ingress protection rating of the drive	-	IPX4		
Impeller material	-	Plastic		

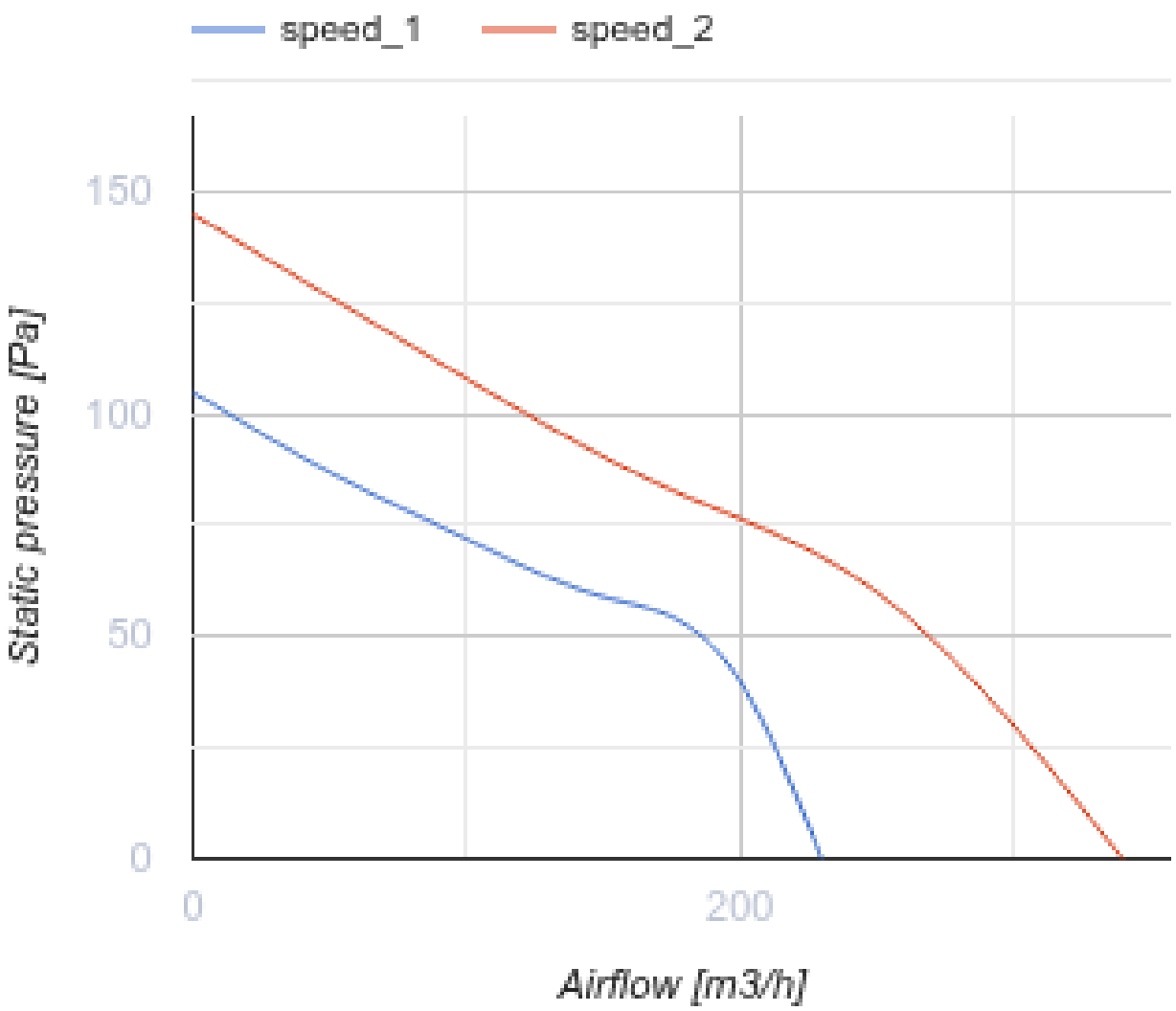
speed_1
speed_2
150
100
50
0
0
200
Static pressure [Pa]
Airflow [m3/h]

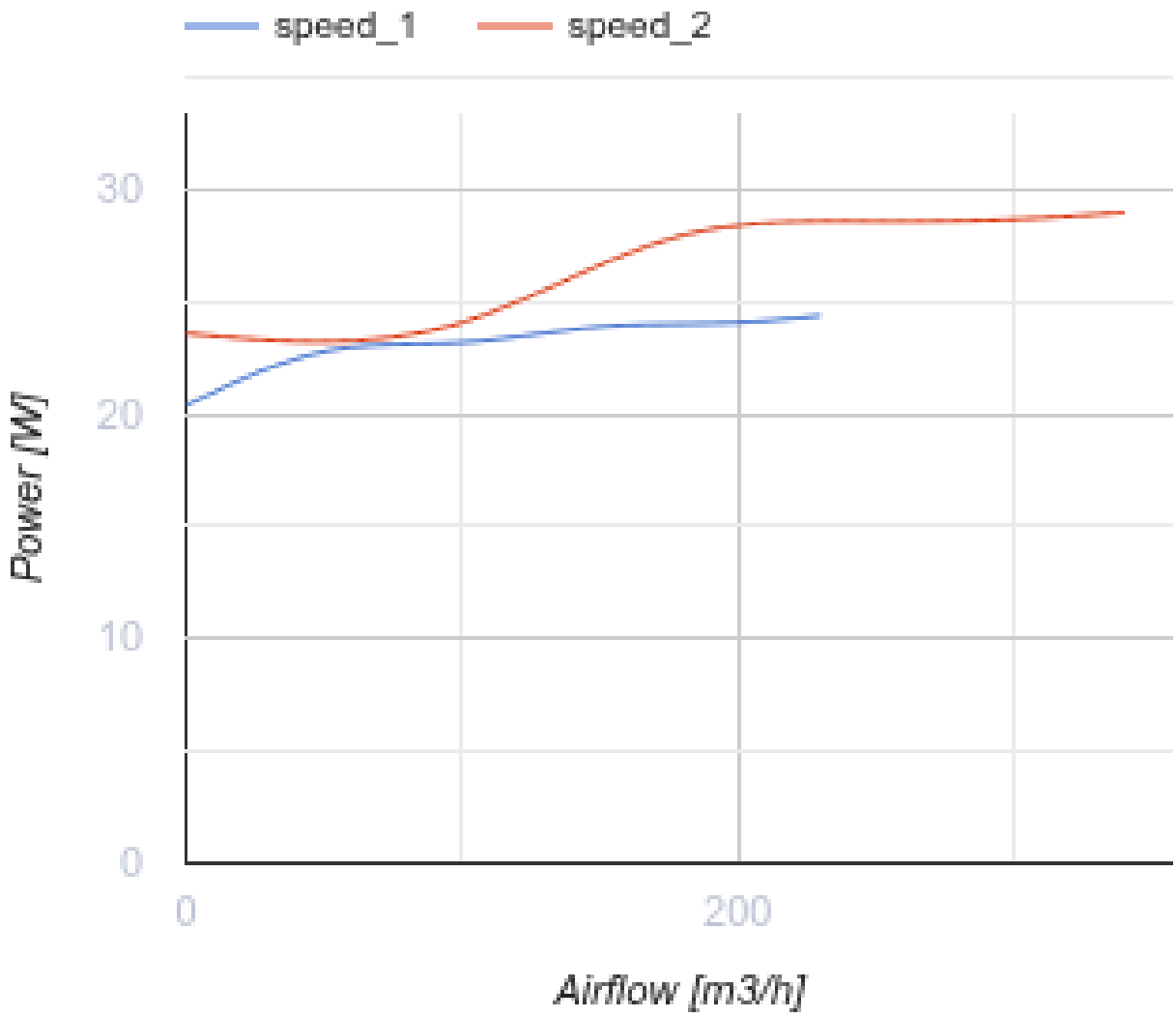

Dimensions

ØD	B	B1	H	L	L1
123	231	243	220	474	42

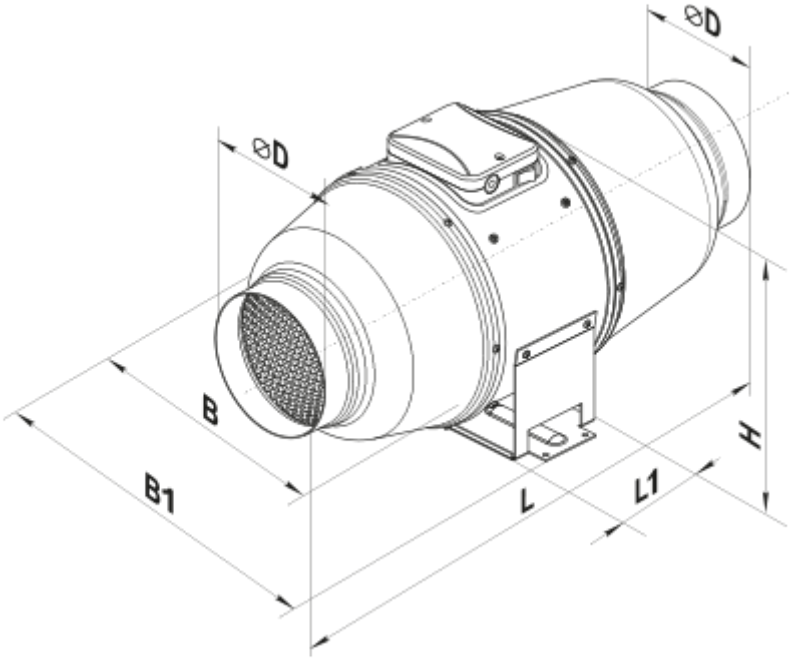

Accessories

For round ducts

Name	Photo	Description
SRP 125/500		Silencers with an internal flexible air duct made of micro-perforated aluminium foil laminated with polyester film
SRP 125/600		Silencers with an internal flexible air duct made of micro-perforated aluminium foil laminated with polyester film
SRP 125/750		Silencers with an internal flexible air duct made of micro-perforated aluminium foil laminated with polyester film
SRP 125/900		Silencers with an internal flexible air duct made of micro-perforated aluminium foil laminated with polyester film
SRP 125/1200		Silencers with an internal flexible air duct made of micro-perforated aluminium foil laminated with polyester film
SRP 125/1500		Silencers with an internal flexible air duct made of micro-perforated aluminium foil laminated with polyester film
SRP 125/2000		Silencers with an internal flexible air duct made of micro-perforated aluminium foil laminated with polyester film

For round ducts

Name	Photo	Description

FB K2 125 G4/F8		Panel filters of a high purification level
FB K2 125 G4/C/F8		Panel filters of a high purification level
FB K2 125 G4/H13		Panel filters of a high purification level
FB K2 125 G4/C/H13		Panel filters of a high purification level
FB 125		Round panel air filters
FBV 125		Round panel air filters with a large filtration area
FBK 125-4	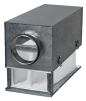	Round bag air filters
FBK 125-5	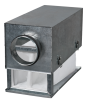	Round bag air filters
FBK 125-7		Round bag air filters

For round ducts

Name	Photo	Description
KOM 125		Backdraught damper with spring-loaded plates for shutting off air flow in round air ducts
KOMu 125		Backdraught damper with spring-loaded plates for shutting off air flow in round air ducts
KOM1 125		Backdraught gravity damper for shutting off air flow in round air ducts
KR 125		Air dampers for controlling air flow in round air ducts
KRV 125		Air dampers for automatic air flow control in round ducts

For round ducts

Name	Photo	Description
VVG 125	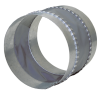	Flexible anti-vibration inserts for round ducts

Water heaters

Name	Photo	Description
NKV 125-2		Inline water supply air heaters or heater for air handling units with a round cross-section
NKV 125-4		Inline water supply air heaters or heater for air handling units with a round cross-section

Electrical heaters

Name	Photo	Description
NK 125-0,6-1		Round electric inline heaters with round cross-section
NK 125-0,8-1		Round electric inline heaters with round cross-section
NK 125-1,2-1		Round electric inline heaters with round cross-section
NK 125-1,6-1		Round electric inline heaters with round cross-section
NK 125-2,4-1		Round electric inline heaters with round cross-section

Ecodesign

Trademark	Vents					
Model	TT Silent-M 125 Un					
Specific energy consumption (SEC) (kWh/(m²/a))	Cold		Average		Warm	
	-54.1	A+	-27	B	-11.5	E
Type of ventilation unit	Unidirectional					
Type of drive installed	Multi-speed					
Type of heat recovery system	None					
Maximum flow rate (m³/h)	145					
Electric power input (W)	22					
Reference flow rate (m³/s)	0.035					
Nominal flow rate (m³/s)	0.035					
Reference pressure difference (Pa)	50					
Specific power input (SPI) (W/(m³/h))	0.286					
Control typology	Local demand control					
Maximum external leakage rates (%)	2.7					
Sound power level (dB(A))	45					
Declared typology	RVU UVU					
The annual electricity consumption (AEC) (kWh/a)	Cold		Average		Warm	
	51		51		51	
The annual heating saved (AHS) (kWh/a)	Cold		Average		Warm	
	5536		2830		1280	