# TT Silent-M 315 R1V



Mixed-flow inline fans in sound-insulated casing

- Sound pressure level LpA at 3 m: 40
- Sound-insulated casing
- Control: Built-in speed controller
- Impeller type: Mixed-flow
- Casing material: Coated steel
- Installation in any position
- Cable with mains plug

| | Unit of measurement | TT Silent-M 315 R1V | |
|---|---|---|---|
| Speed | - | 1 | 2 |
| Connected air duct size | mm | 315 | |
| Phases | - | 1 | |
| Minimum supply voltage | V | 230 | |
| Maximum supply voltage | V | 230 | |
| Power supply frequency | Hz | 50/60 | |
| Rated power | W | 230 | 320 |
| Unit current | A | 1 | 1.42 |
| Maximum airflow | m³/h | 1570 | 2050 |
| Rotation speed at 50hz | - | 1890 | 2430 |
| Sound pressure level LpA at 3 m | dB(A) | 36 | 40 |
| Weight | kg | 29.6 | |
| Transported air temperature (max) | °C | 60 | |
| Ingress protection rating | - | IPX4 | |
| Ingress protection rating of the drive | - | IPX4 | |
| Impeller material | - | Plastic | |

## Dimensions

| ØD | B | B1 | H | L | L1 |
|---|---|---|---|---|---|
| 313 | 450 | 526 | 434 | 785 | 180 |

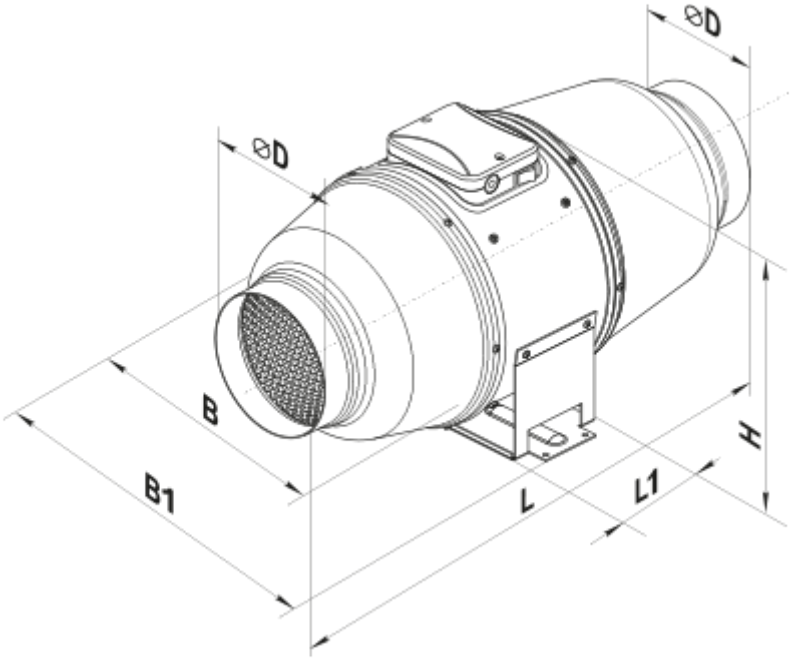


## Accessories

### For round ducts

| Name | Photo | Description |
|---|---|---|
| SR 315/1200 |  | Silencers made of galvanized steel filled with non-combustible sound-absorbing material |
| SRF 315/900 |  | Silencers made of aluminium alloy filled with non-combustible sound-absorbing material |
| SRF 315/2000 |  | Silencers made of aluminium alloy filled with non-combustible sound-absorbing material |
| SRP 315/500 |  | Silencers with an internal flexible air duct made of micro-perforated aluminium foil laminated with polyester film |
| SRP 315/600 |  | Silencers with an internal flexible air duct made of micro-perforated aluminium foil laminated with polyester film |
| SRP 315/750 |  | Silencers with an internal flexible air duct made of micro-perforated aluminium foil laminated with polyester film |
| SRP 315/900 |  | Silencers with an internal flexible air duct made of micro-perforated aluminium foil laminated with polyester film |

| | | |
|---|---|---|
| SRP 315/1200 |  | Silencers with an internal flexible air duct made of micro-perforated aluminium foil laminated with polyester film |
| SRP 315/1500 |  | Silencers with an internal flexible air duct made of micro-perforated aluminium foil laminated with polyester film |
| SRP 315/2000 |  | Silencers with an internal flexible air duct made of micro-perforated aluminium foil laminated with polyester film |

### For round ducts

| Name | Photo | Description |
|---|---|---|
| FB 315 |  | Round panel air filters |
| FBK 315-4 | 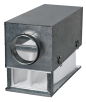 | Round bag air filters |
| FBK 315-5 | 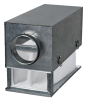 | Round bag air filters |
| FBK 315-7 |  | Round bag air filters |

### For round ducts

| Name | Photo | Description |
|---|---|---|
| KOM 315 |  | Backdraught damper with spring-loaded plates for shutting off air flow in round air ducts |
| KOMu 315 |  | Backdraught damper with spring-loaded plates for shutting off air flow in round air ducts |
| KOM1 315 |  | Backdraught gravity damper for shutting off air flow in round air ducts |
| KR 315 |  | Air dampers for controlling air flow in round air ducts |
| KRV 315 |  | Air dampers for automatic air flow control in round ducts |

### Water heaters

| Name | Photo | Description |
|---|---|---|

| | | |
|---|---|---|
| NKV 315-2 |  | Inline water supply air heaters or heater for air handling units with a round cross-section |
| NKV 315-4 |  | Inline water supply air heaters or heater for air handling units with a round cross-section |

### Electrical heaters

| Name | Photo | Description |
|---|---|---|
| NK 315-1,2-1 |  | Round electric inline heaters with round cross-section |
| NK 315-2,0-1 |  | Round electric inline heaters with round cross-section |
| NK 315-2,4-1 |  | Round electric inline heaters with round cross-section |
| NK 315-3,6-3 |  | Round electric inline heaters with round cross-section |
| NK 315-6,0-3 |  | Round electric inline heaters with round cross-section |
| NK 315-9,0-3 |  | Round electric inline heaters with round cross-section |

## Ecodesign

| Trademark | Vents |
|---|---|
| Model | TT Silent-M 315 R1V |
| Type of drive installed | External MSD or VSD |
| Type of heat recovery system | None |
| Nominal external pressure (Pa) | 327 |
| Maximum external leakage rates (%) | 2.7 |
| Static efficiency (%) | 32.5 |
| Declared typology | NRVU UVU |
| Effective electric power input (kW) | 0.317 |
| Sound power level (dB(A)) | 58 |