# TwinFusion E



Single-room HRV with counter-flow HRV or ERV heat recovery and app control. Cold-climate versions add integrated heaters plus mechanical supply and gravity exhaust dampers

- Power of electrical preheater: 200
- Sound pressure level LpA at 3 m: 27
- Sound pressure level LpA at 1 m: 37
- Heat exchanger type: Counter flow
- Heat exchanger material: Polystyrene
- Supply filter: Coarse 90% / G3+G4

Optional: ePM1 70% / F8

- Extract filter: Coarse 45% / G3
- Preheater: Electric
- Casing material: ABS Plastic + EPP
- Shutters
- Heater

| | Unit of measurement | TwinFusion E | | |
|---|---|---|---|---|
| Speed | - | 1 | 2 | 3 |
| Connected air duct size | mm | 250 | | |
| Maximum supply voltage | V | 240 | | |
| Minimum supply voltage | V | 220 | | |
| Power supply frequency | Hz | 50/60 | | |
| Power of electrical preheater | W | 200 | | |
| Unit current | A | 0.3 | | |
| Maximum airflow | m³/h | 30 | 60 | 90 |
| Maximum airflow (Boost mode) | m³/h | 150 | | |
| Sound pressure level LpA at 3 m | dB(A) | 12 | 21 | 27 |
| Sound pressure level LpA at 1 m | dB(A) | 23 | 31 | 37 |
| Heat recovery efficiency, max | % | 98 | | |
| Heat exchanger type | - | Counter flow | | |
| Heat exchanger material | - | Polystyrene | | |
| Weight | kg | 11 | | |
| Supply filter | - | Coarse 90% / G3+G4<br>Optional: ePM1 70% / F8 | | |
| Extract filter | - | Coarse 45% / G3 | | |
| Transported air temperature (max) | °C | 40 | | |
| Transported air temperature (min) | °C | -20 | | |
| Minimum wall thickness | mm | 300 | | |

| | | |
|---|---|---|
| Maximum wall thickness | mm | 800 |
| Energy efficiency class | - | A+ |

## Dimensions

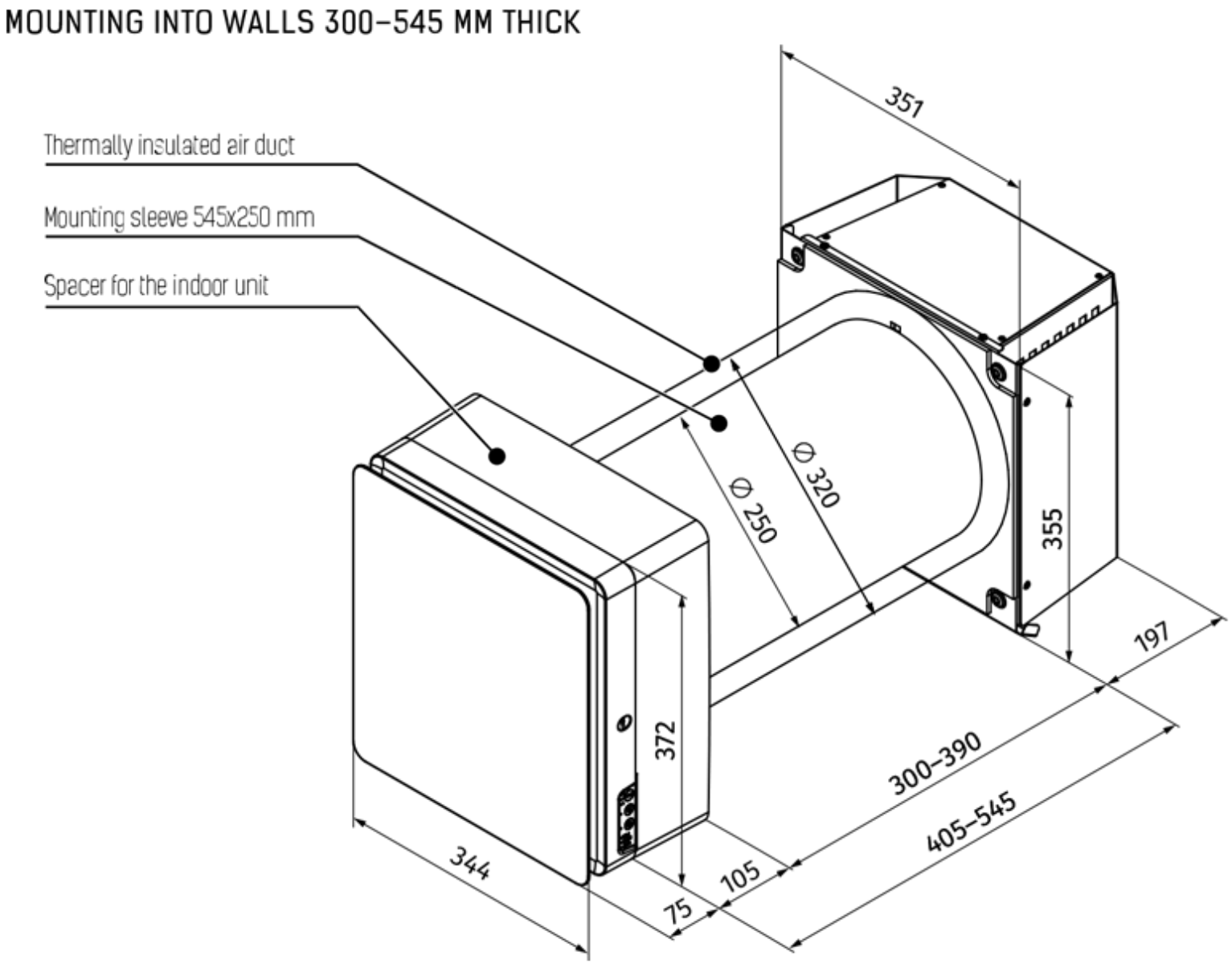

## MOUNTING INTO WALLS 550–800 MM THICK

