TwinFusion



Single-room HRV with counter-flow HRV or ERV heat recovery and app control. Cold-climate versions add integrated heaters plus mechanical supply and gravity exhaust dampers

- Sound pressure level LpA at 3 m: 27
- Sound pressure level LpA at 1 m: 37
- Heat exchanger type: Counter flow
- Heat exchanger material: Polystyrene
- Supply filter: Coarse 90% / G3+G4

Optional: ePM1 70% / F8

- Extract filter: Coarse 45% / G3
- Casing material: ABS Plastic + EPP
- Shutters

	Unit of measurement	TwinFusion		
Speed	-	1	2	3
Connected air duct size	mm	250		
Maximum supply voltage	V	240		
Minimum supply voltage	V	220		
Power supply frequency	Hz	50/60		
Unit current	A	0.3		
Maximum airflow	m³/h	30	60	90
Maximum airflow (Boost mode)	m³/h	150		
Sound pressure level LpA at 3 m	dB(A)	12	21	27
Sound pressure level LpA at 1 m	dB(A)	23	31	37
Heat recovery efficiency, max	%	98		
Heat exchanger type	-	Counter flow		
Heat exchanger material	-	Polystyrene		
Weight	kg	11		
Supply filter	-	Coarse 90% / G3+G4 Optional: ePM1 70% / F8		
Extract filter	-	Coarse 45% / G3		
Transported air temperature (max)	°C	40		
Transported air temperature (min)	°C	-20		
Minimum wall thickness	mm	300		
Maximum wall thickness	mm	800		

Energy efficiency class	-	A+

Dimensions

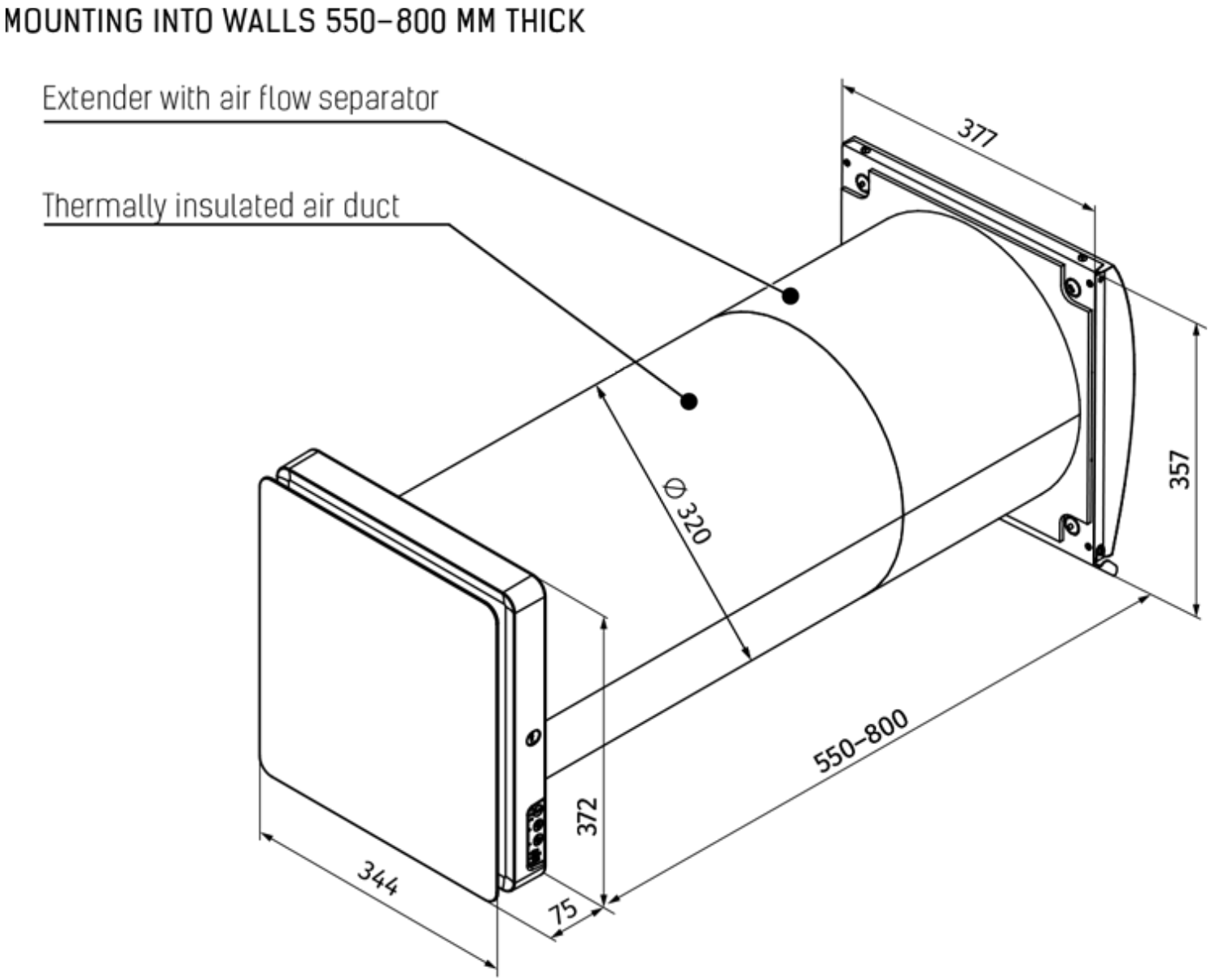

MOUNTING INTO WALLS 300–545 MM THICK

