VCN 200 EC S

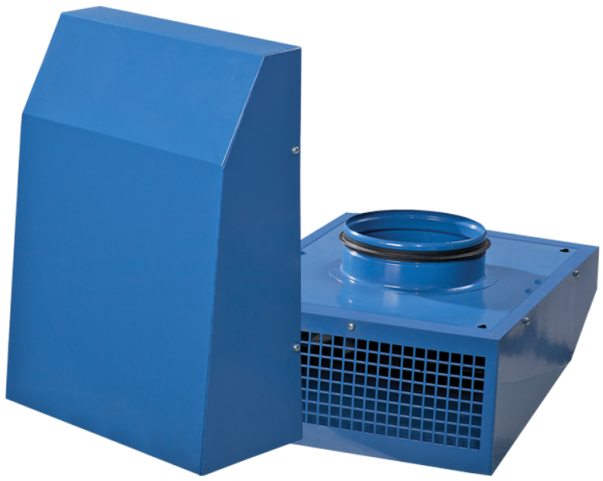

Extract centrifugal fans for outdoor wall installation with EC-motors

• Sound pressure level LpA at 3 m: 58
• Impeller type: Centrifugal impeller with backward curved blades
• Casing material: Coated steel
• Installation in any position

	Unit of measurement	VCN 200 EC S
Connected air duct size	mm	200
Phases	-	1
Minimum supply voltage	V	230
Maximum supply voltage	V	230
Power supply frequency	Hz	50/60
Rated power	W	102
Unit current	A	0.86
Maximum airflow	m^3/h	755
Rotation speed at 50hz	-	2800
Sound pressure level LpA at 3 m	dB(A)	58
Weight	kg	5.3
Transported air temperature (max)	°C	40
Transported air temperature (min)	°C	-25
Ingress protection rating	-	IPX4
Ingress protection rating of the drive	-	IP55
Impeller material	-	Plastic

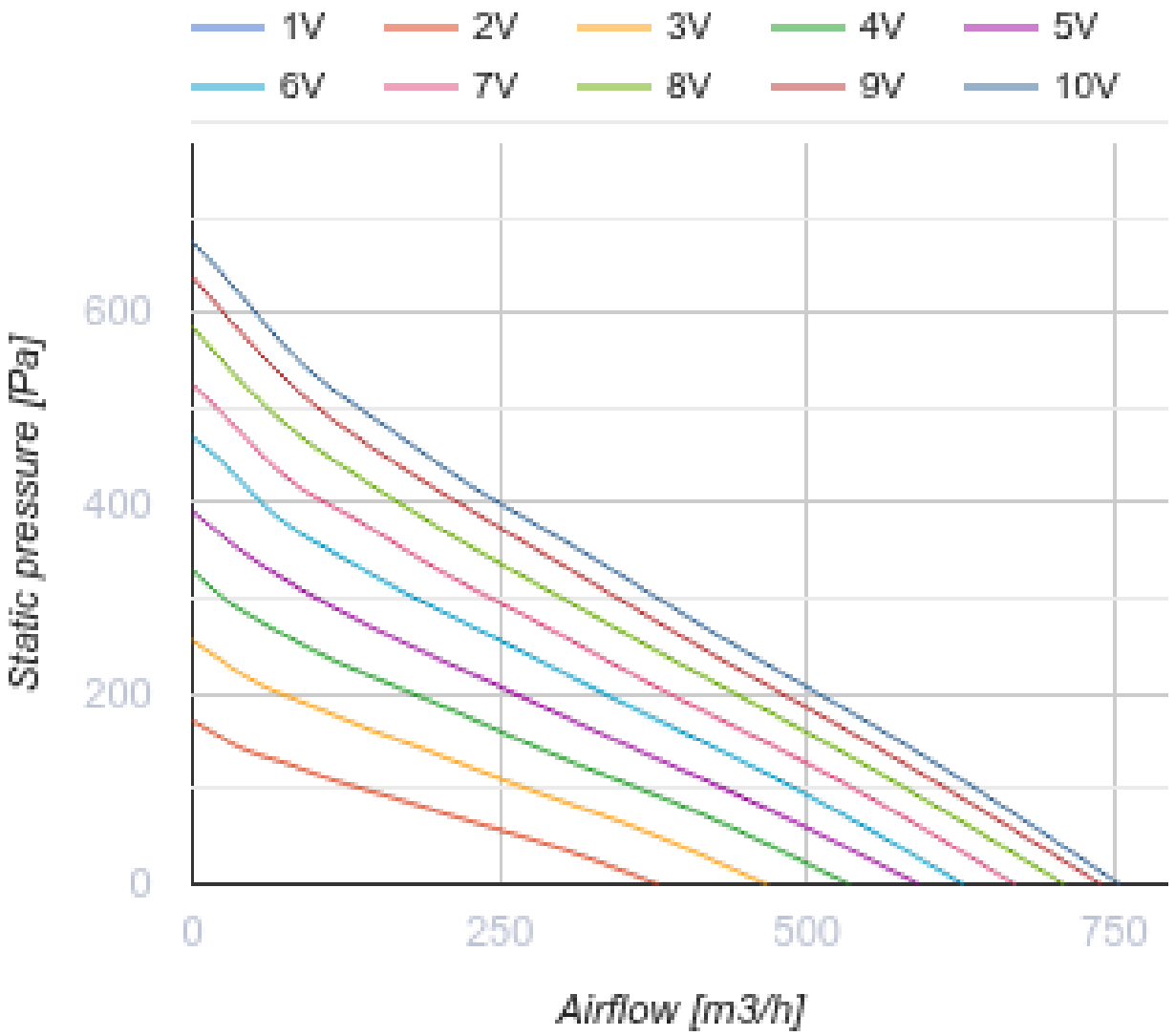
1V
2V
3V
4V
5V
6V
7V
8V
9V
10V
600
400
200
0
Static pressure [Pa]
0
250
500
750
Airflow [m3/h]

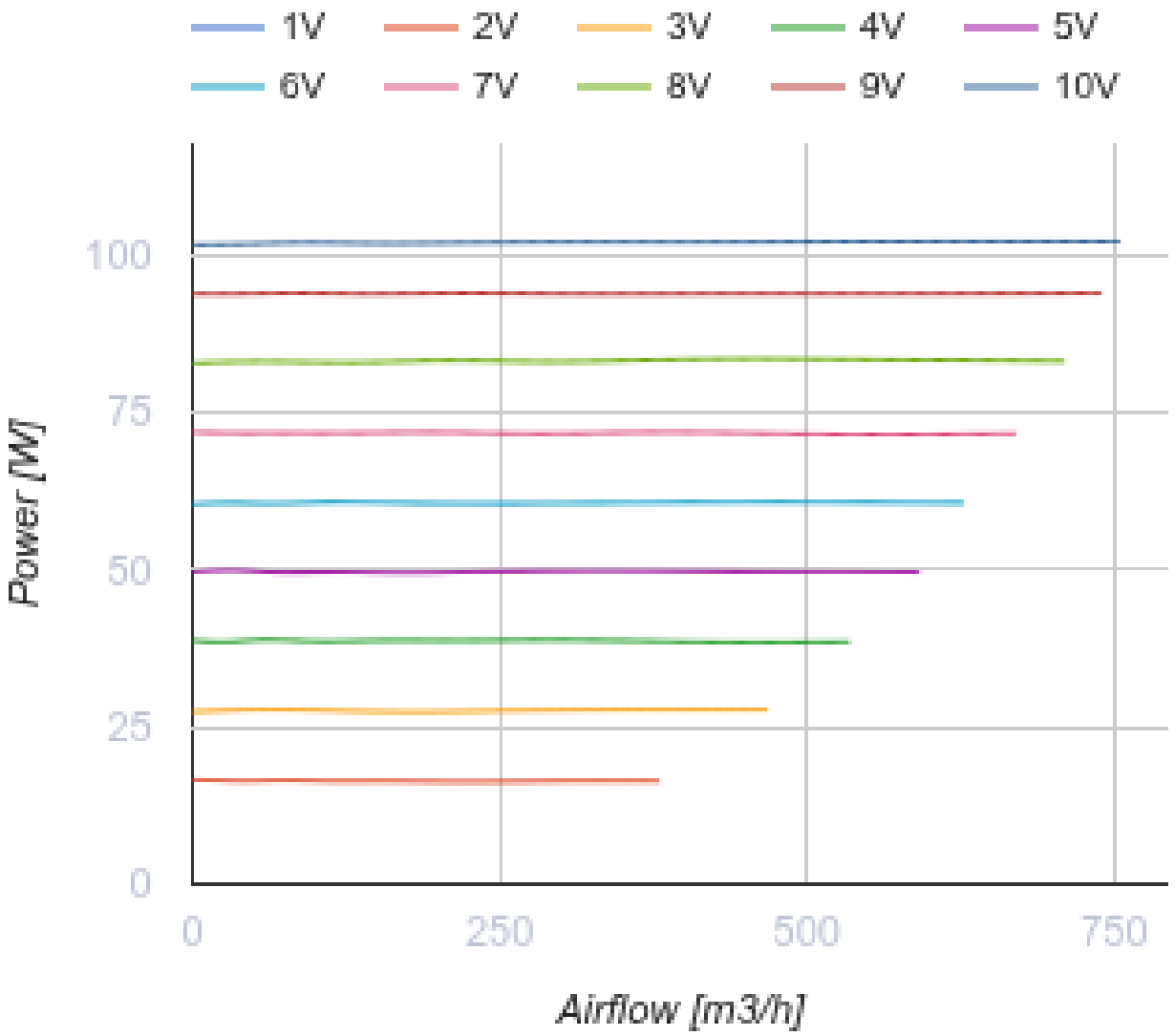

Dimensions

ØD	L	B	H
200	400	326	181.4

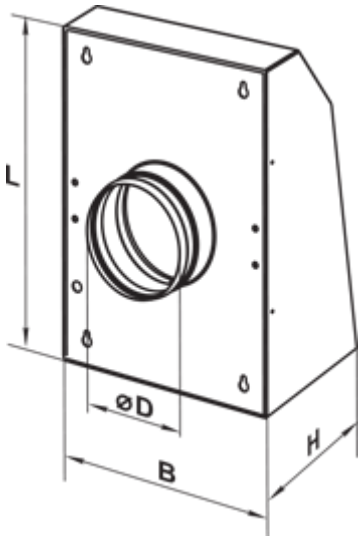

Accessories

Speed controllers for EC motors

Name	Photo	Description
R-1/010		Speed controller for EC motors

Ecodesign

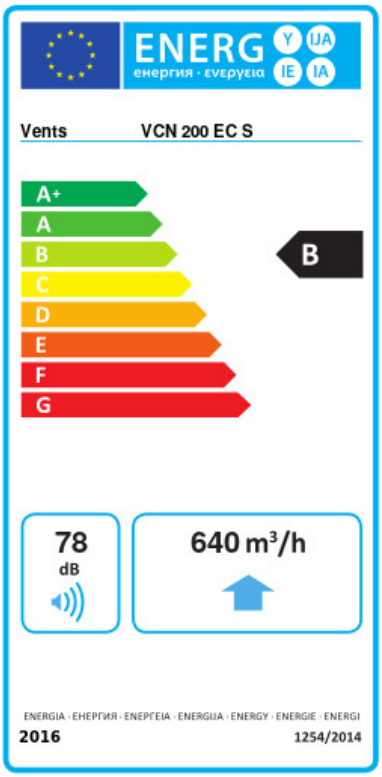

Trademark	Vents					
Model	VCN 200 EC S					
Specific energy consumption (SEC) (kWh/(m²/a))	Cold		Average		Warm	
	-54.2	A+	-27.2	B	-11.7	E
Type of ventilation unit	Unidirectional					
Type of drive installed	Variable speed					
Type of heat recovery system	None					
Maximum flow rate (m³/h)	640					
Electric power input (W)	102.2					
Reference flow rate (m³/s)	0.124					
Reference pressure difference (Pa)	50					
Specific power input (SPI) (W/(m³/h))	0.086					
Control typology	Local demand control					
Maximum external leakage rates (%)	2.7					
Sound power level (dB(A))	78					
Declared typology	RVU UVU					
The annual electricity consumption (AEC) (kWh/a)	Cold		Average		Warm	
	45		45		45	
The annual heating saved (AHS) (kWh/a)	Cold		Average		Warm	
	5536		2830		1280	