VCU 2E 160x62

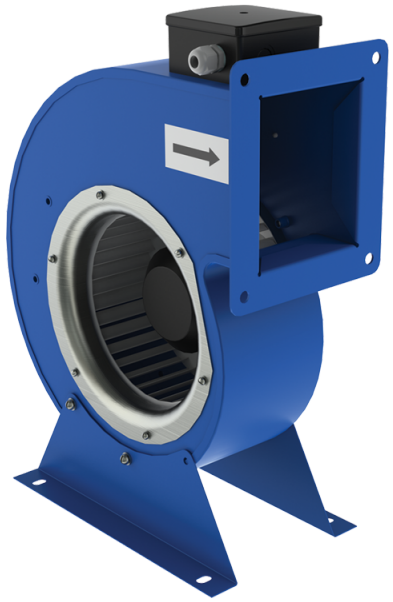

Radial fans

• Sound pressure level LpA at 3 m: 70
• Impeller type: Centrifugal impeller with forward curved blades
• Casing material: Coated steel

	Unit of measurement	VCU 2E 160x62
Phases	-	1
Minimum supply voltage	V	230
Maximum supply voltage	V	230
Power supply frequency	Hz	50
Rated power	W	264
Unit current	A	1.17
Maximum airflow	m³/h	560
Rotation speed at 50hz	-	2630
Sound pressure level LpA at 3 m	dB(A)	70
Weight	kg	4.8
Transported air temperature (max)	°C	50
Transported air temperature (min)	°C	-25
Ingress protection rating	-	IPX4
Ingress protection rating of the drive	-	IP44
Impeller material	-	Galvanized steel

Dimensions

ØD	B	H	H1	H2	L	L1	L2	P	M	d
160	277	324	136	106	106	130	98.4	139	200	9

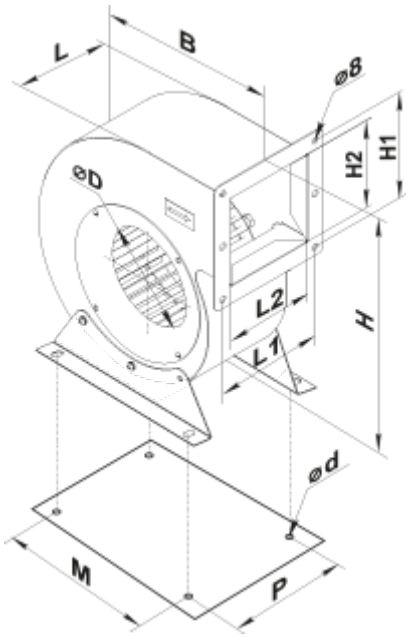

Accessories

Transformer speed controllers

Name	Photo	Description
RSA5E-3,5-T		Speed controllers are applied for air flow control of single phase fans by means of motor step speed control
RSA5E-5,0-T		Speed controllers are applied for air flow control of single phase fans by means of motor step speed control
RSA5E-7,5-T		Speed controllers are applied for air flow control of single phase fans by means of motor step speed control