VCU 4E 180x92

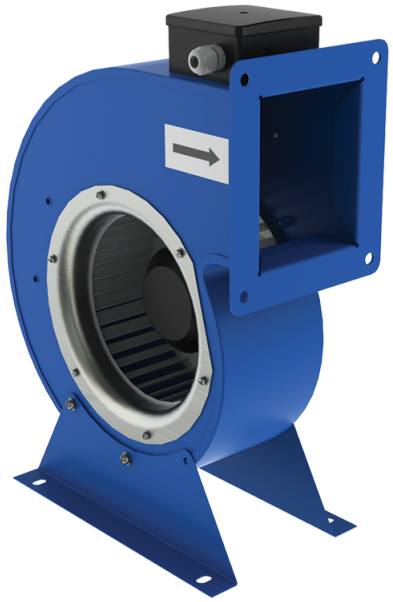

Radial fans

• Sound pressure level LpA at 3 m: 62
• Impeller type: Centrifugal impeller with forward curved blades
• Casing material: Coated steel

	Unit of measurement	VCU 4E 180x92
Phases	-	1
Minimum supply voltage	V	230
Maximum supply voltage	V	230
Power supply frequency	Hz	50
Rated power	W	160
Unit current	A	0.7
Maximum airflow	m³/h	800
Rotation speed at 50hz	-	1465
Sound pressure level LpA at 3 m	dB(A)	62
Weight	kg	7.1
Transported air temperature (max)	°C	45
Transported air temperature (min)	°C	-25
Ingress protection rating	-	IPX4
Ingress protection rating of the drive	-	IP44
Impeller material	-	Galvanized steel

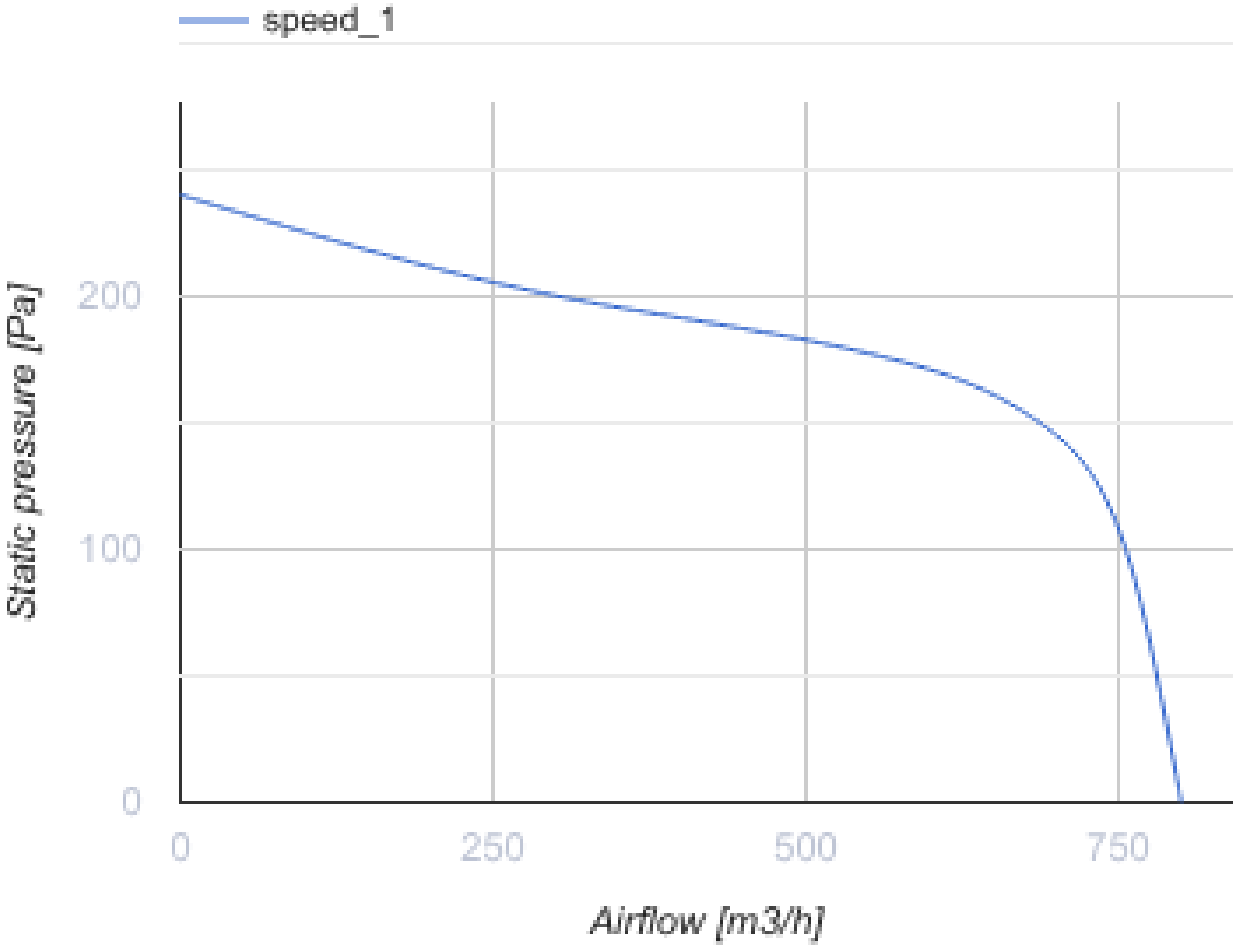
speed_1
Static pressure [Pa]
200
100
0
0
250
500
750
Airflow [m3/h]

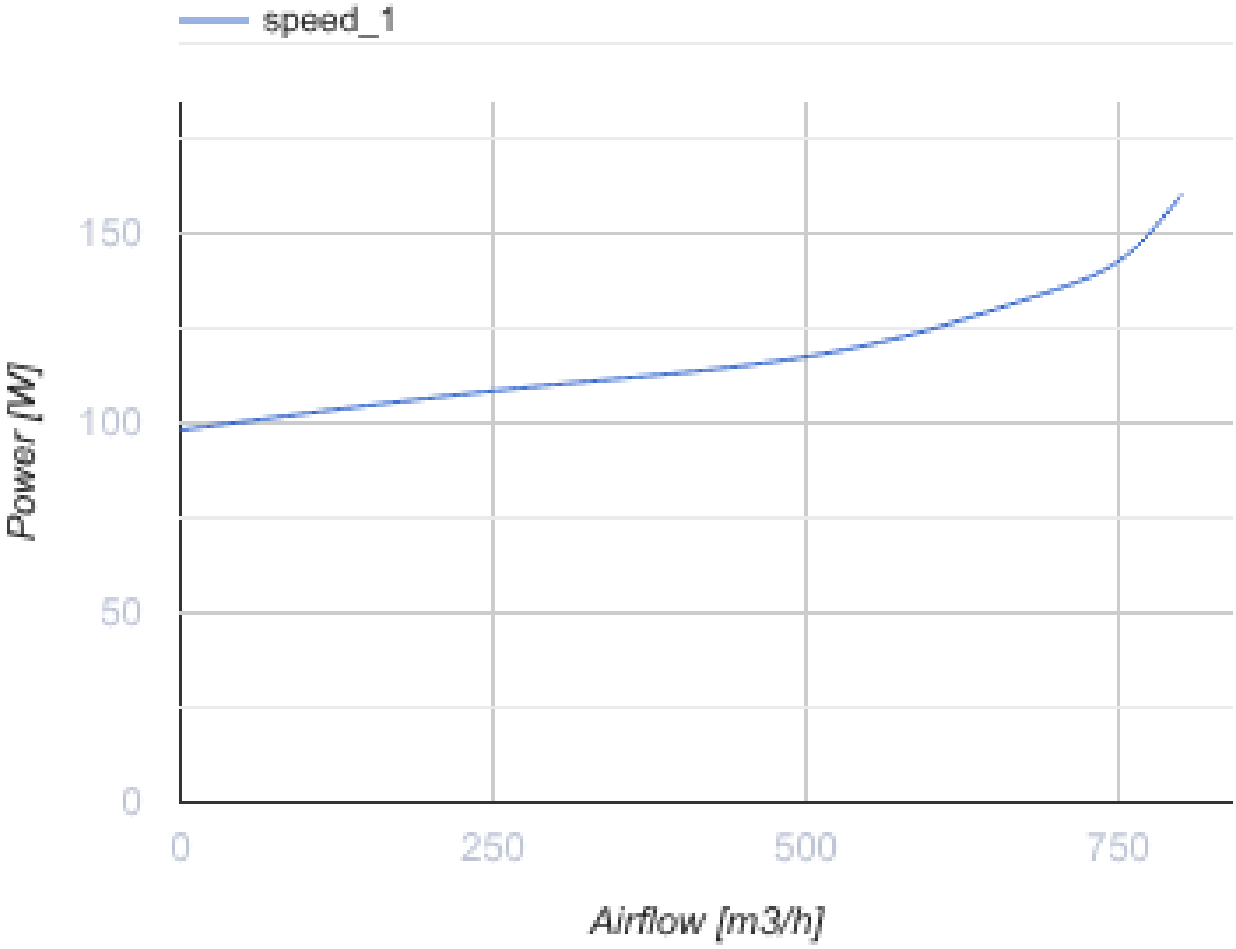

Dimensions

ØD	B	H	H1	H2	L	L1	L2	P	M	d
180	311	360	150	120	148	170	140.4	181	230	9

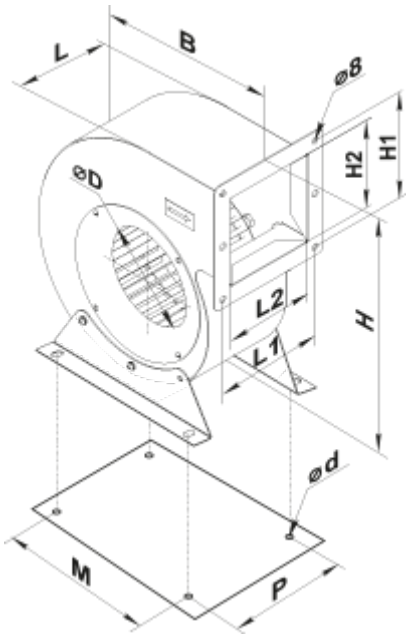

Accessories

Transformer speed controllers

Name	Photo	Description
RSA5E-3,5-T		Speed controllers are applied for air flow control of single phase fans by means of motor step speed control
RSA5E-5,0-T		Speed controllers are applied for air flow control of single phase fans by means of motor step speed control
RSA5E-7,5-T		Speed controllers are applied for air flow control of single phase fans by means of motor step speed control

Ecodesign

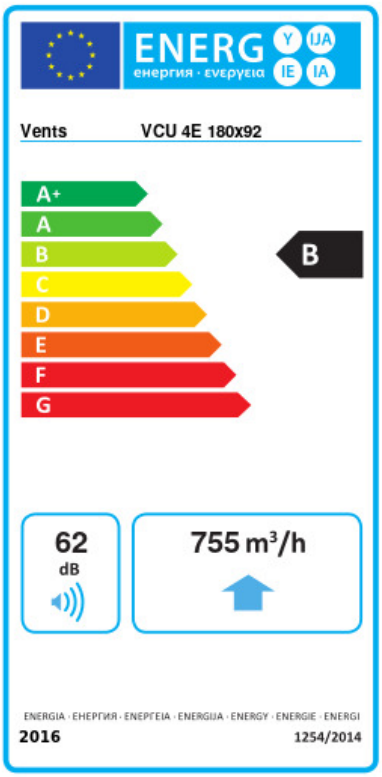

Trademark	Vents					
Model	VCU 4E 180x92					
Specific energy consumption (SEC) (kWh/(m²/a))	Cold		Average		Warm	
	-53.2	A+	-26.1	B	-10.6	E
Type of ventilation unit	Unidirectional					
Type of drive installed	Variable speed					
Type of heat recovery system	None					
Maximum flow rate (m³/h)	755					
Electric power input (W)	160					
Reference flow rate (m³/s)	0.147					
Reference pressure difference (Pa)	50					
Specific power input (SPI) (W/(m³/h))	0.167					
Control typology	Local demand control					
Maximum external leakage rates (%)	2.7					
Declared typology	RVU UVU					
Sound power level (dB(A))	62					
The annual electricity consumption (AEC) (kWh/a)	Cold		Average		Warm	
	88		88		88	
The annual heating saved (AHS) (kWh/a)	Cold		Average		Warm	
	5536		2830		1280	