VCU 4E 225x102

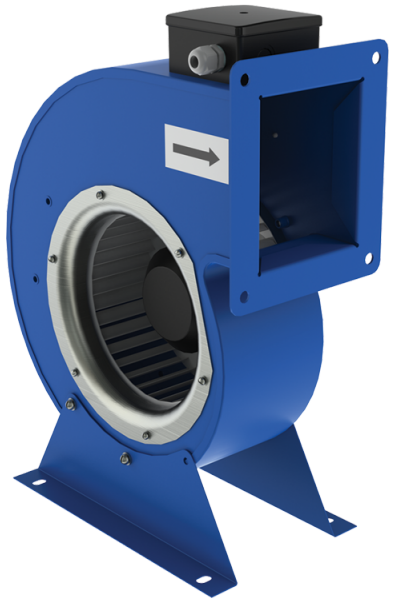

Radial fans

• Sound pressure level LpA at 3 m: 69
• Impeller type: Centrifugal impeller with forward curved blades
• Casing material: Coated steel

	Unit of measurement	VCU 4E 225x102
Phases	-	1
Maximum supply voltage	V	230
Minimum supply voltage	V	230
Power supply frequency	Hz	50
Rated power	W	395
Unit current	A	1.98
Maximum airflow	m³/h	1480
Rotation speed at 50hz	-	1330
Sound pressure level LpA at 3 m	dB(A)	69
Weight	kg	11.9
Transported air temperature (max)	°C	70
Transported air temperature (min)	°C	-40
Ingress protection rating	-	IPX4
Ingress protection rating of the drive	-	IP44
Impeller material	-	Galvanized steel

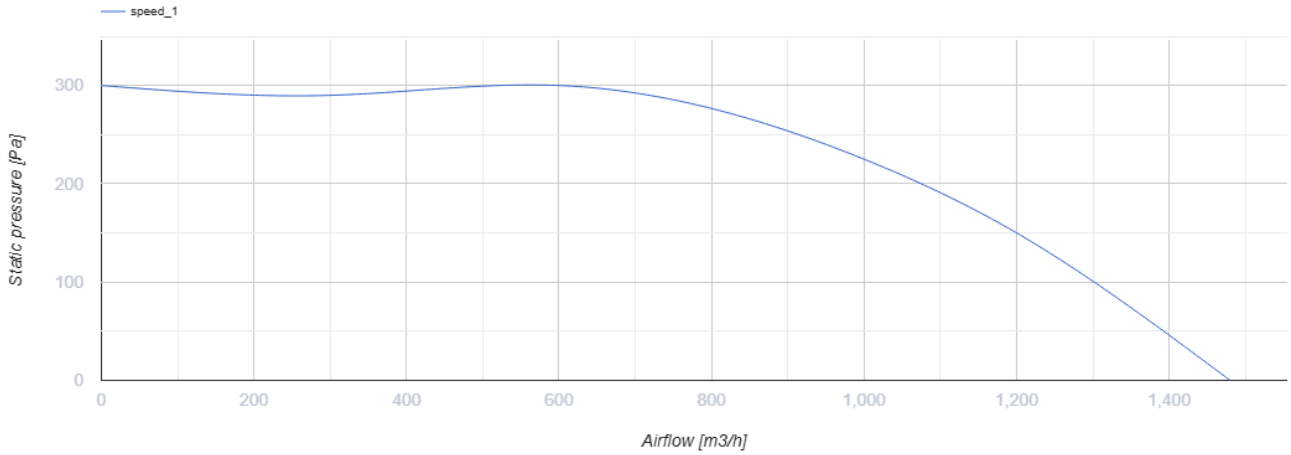

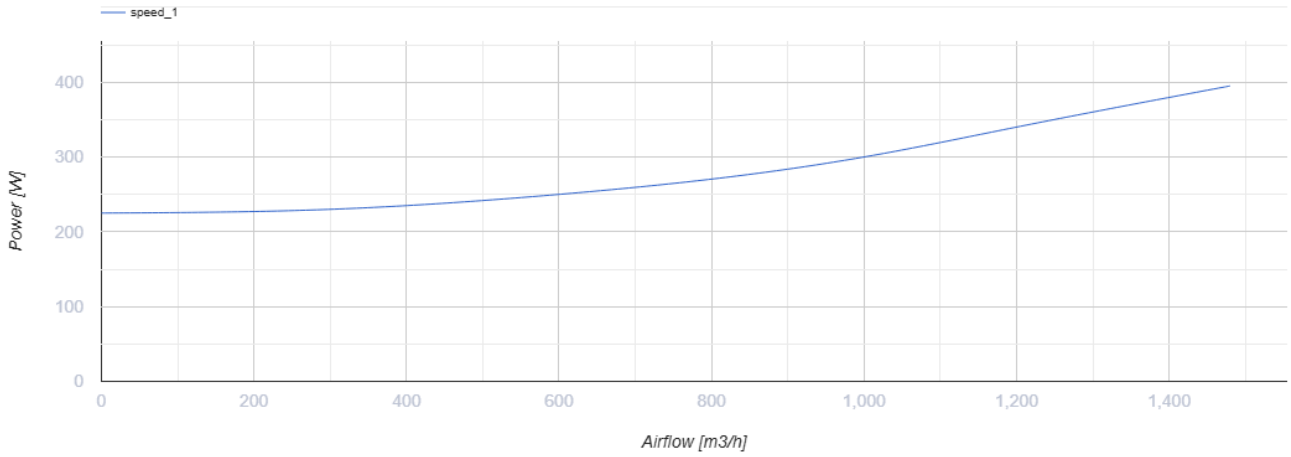

Dimensions

ØD	B	H	H1	H2	L	L1	L2	P	M	d
225	365	441	210	171	145	170	137	178	250	11

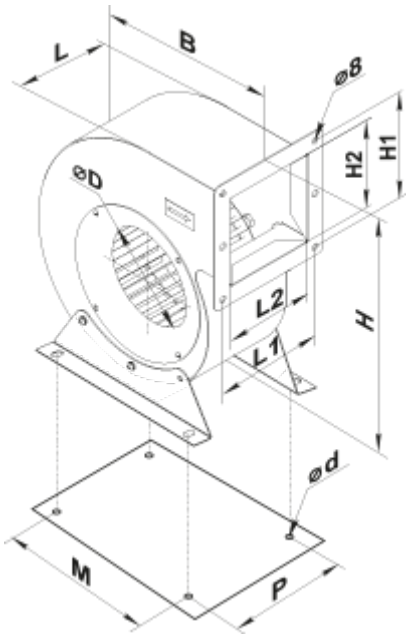

Accessories

Transformer speed controllers

Name	Photo	Description
RSA5E-3,5-T		Speed controllers are applied for air flow control of single phase fans by means of motor step speed control
RSA5E-5,0-T		Speed controllers are applied for air flow control of single phase fans by means of motor step speed control
RSA5E-7,5-T		Speed controllers are applied for air flow control of single phase fans by means of motor step speed control

Ecodesign

Trademark	Vents
Model	VCU 4E 225x102
Type of drive installed	External MSD or VSD
Type of heat recovery system	None
Nominal external pressure (Pa)	270
Maximum external leakage rates (%)	2.7
Static efficiency (%)	23.1
Effective electric power input (kW)	0.275
Sound power level (dB(A))	89
Declared typology	NRVU UVU