VCUN 180x74-0,55-4 R90

Radial fans

• Sound pressure level LpA at 3 m: 64
• Impeller type: Centrifugal impeller with forward curved blades
• Casing material: Coated steel

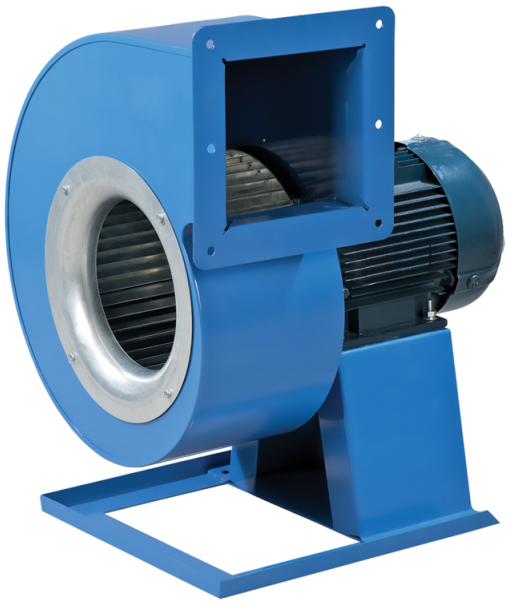

	Unit of measurement	VCUN 180x74-0,55-4 R90
Phases	-	3
Minimum supply voltage	V	400
Maximum supply voltage	V	400
Power supply frequency	Hz	50
Rated power	W	550
Unit current	A	1.6
Maximum airflow	m³/h	1030
Rotation speed at 50hz	-	1360
Sound pressure level LpA at 3 m	dB(A)	64
Weight	kg	13.5
Transported air temperature (max)	°C	60
Ingress protection rating	-	IP54
Ingress protection rating of the drive	-	IP54
Impeller material	-	Galvanized steel

Dimensions

ØD	Ød	Ød1	B	H	H1	H2	H3	L	L1	L2	P	M	I	G	K	S
180	10	10	311	414	143	120	193	365	143	114	146	270	270	22	314	90

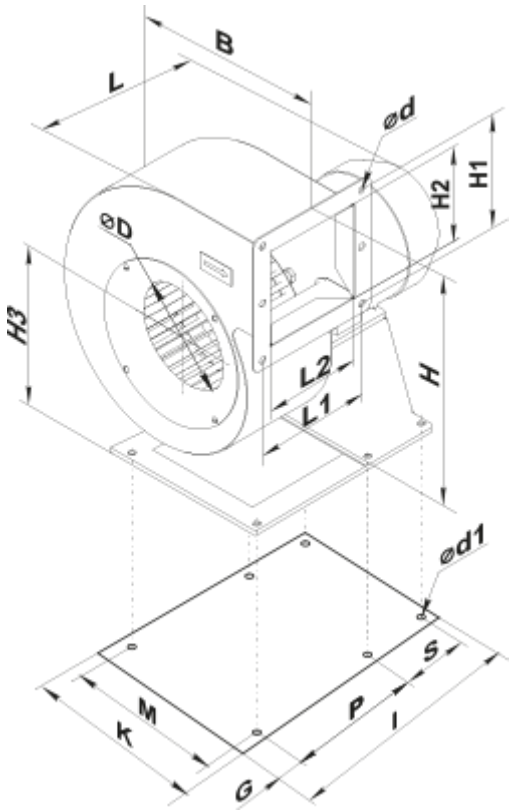

Accessories

Transformer speed controllers

Name	Photo	Description
RSA5D-6,0-M		Three phase speed controller
RSA5D-8,0-M		Three phase speed controller
RSA5D-11,0-M		Three phase speed controller