VCUN 200x93-1,1-2 R90

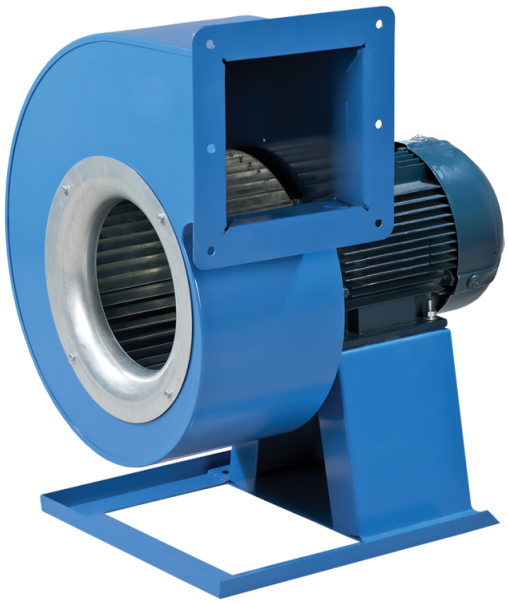

Radial fans

• Sound pressure level LpA at 3 m: 73
• Impeller type: Centrifugal impeller with forward curved blades
• Casing material: Coated steel

	Unit of measurement	VCUN 200x93-1,1-2 R90
Phases	-	3
Maximum supply voltage	V	400
Minimum supply voltage	V	400
Power supply frequency	Hz	50
Rated power	W	1100
Unit current	A	2.6
Maximum airflow	m^3/h	1900
Rotation speed at 50hz	-	2800
Sound pressure level LpA at 3 m	dB(A)	73
Weight	kg	16.2
Transported air temperature (max)	°C	60
Ingress protection rating	-	IP54
Ingress protection rating of the drive	-	IP54
Impeller material	-	Galvanized steel

Dimensions

ØD	Ød	Ød1	B	H	H1	H2	H3	L	L1	L2	P	M	I	G	K	S
200	10	10	345	436	160	134	193	380	160	129	158	270	284	24	315	90

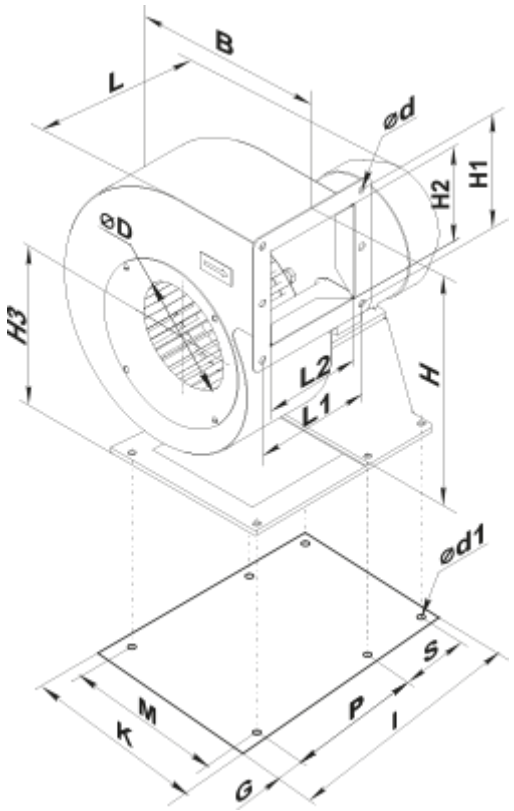

Accessories

Transformer speed controllers

Name	Photo	Description
RSA5D-6,0-M		Three phase speed controller
RSA5D-8,0-M		Three phase speed controller
RSA5D-11,0-M		Three phase speed controller