VCUN 250x127-1,5-6 R90

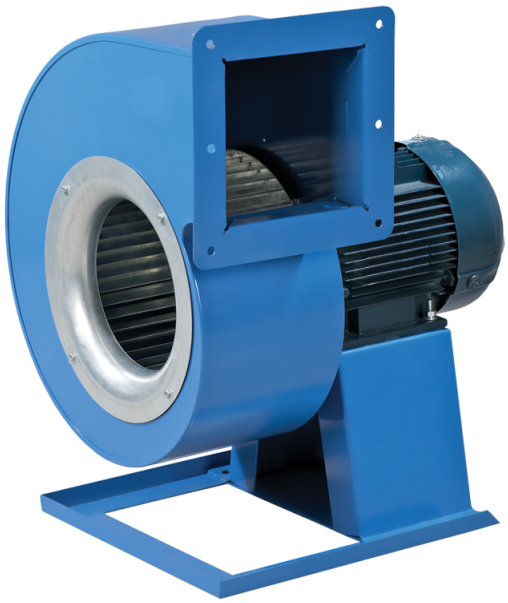

Radial fans

• Sound pressure level LpA at 3 m: 68
• Impeller type: Centrifugal impeller with forward curved blades
• Casing material: Coated steel

	Unit of measurement	VCUN 250x127-1,5-6 R90
Phases	-	3
Maximum supply voltage	V	400
Minimum supply voltage	V	400
Power supply frequency	Hz	50
Rated power	W	1500
Unit current	A	4.2
Maximum airflow	m^3/h	2415
Rotation speed at 50hz	-	940
Sound pressure level LpA at 3 m	dB(A)	68
Weight	kg	33
Transported air temperature (max)	°C	60
Ingress protection rating	-	IP54
Ingress protection rating of the drive	-	IP54
Impeller material	-	Galvanized steel

Dimensions

ØD	Ød	Ød1	B	H	H1	H2	H3	L	L1	L2	P	M	I	G	K	S
250	10	12	431	594	202	168	292	473	202	166	206	300	373	27	355	125

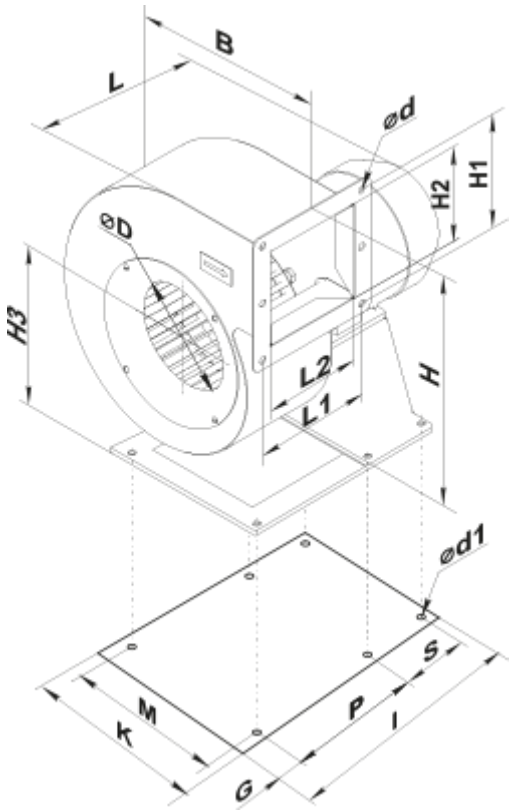

Accessories

Transformer speed controllers

Name	Photo	Description
RSA5D-6,0-M		Three phase speed controller
RSA5D-8,0-M		Three phase speed controller
RSA5D-11,0-M		Three phase speed controller