VCUN 315x143-2,2-6 R90

Radial fans

• Sound pressure level LpA at 3 m: 70
• Impeller type: Centrifugal impeller with forward curved blades
• Casing material: Coated steel

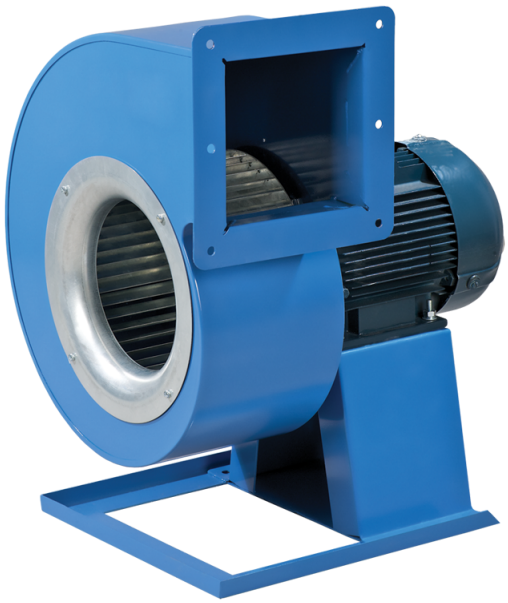

	Unit of measurement	VCUN 315x143-2,2-6 R90
Phases	-	3
Maximum supply voltage	V	400
Minimum supply voltage	V	400
Power supply frequency	Hz	50
Rated power	W	2200
Unit current	A	5.6
Maximum airflow	m³/h	4375
Rotation speed at 50hz	-	940
Sound pressure level LpA at 3 m	dB(A)	70
Weight	kg	46.8
Transported air temperature (max)	°C	60
Ingress protection rating	-	IP54
Ingress protection rating of the drive	-	IP54
Impeller material	-	Galvanized steel

Dimensions

ØD	Ød	Ød1	B	H	H1	H2	H3	L	L1	L2	P	M	I	G	K	S
315	10	15	543	731	250	213	353	568	255	216	268	350	452	27	405	140

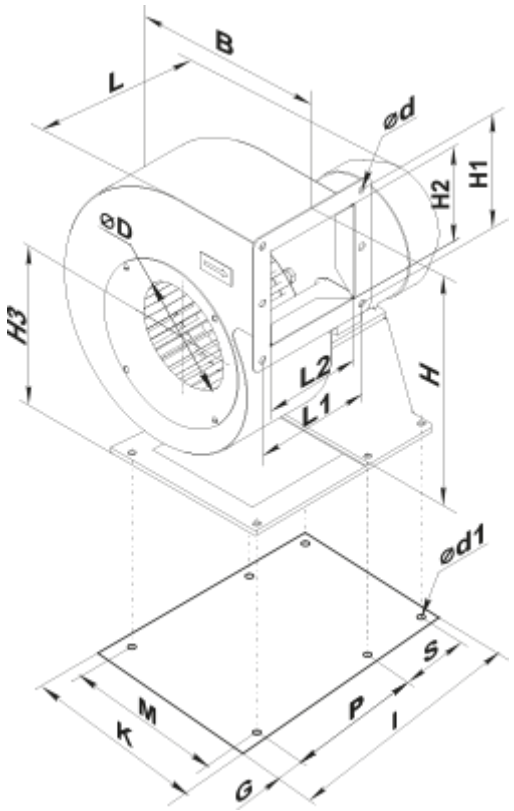

Accessories

Transformer speed controllers

Name	Photo	Description
RSA5D-8,0-M		Three phase speed controller
RSA5D-11,0-M		Three phase speed controller