# VCUN 500x229-11,0-4 R90

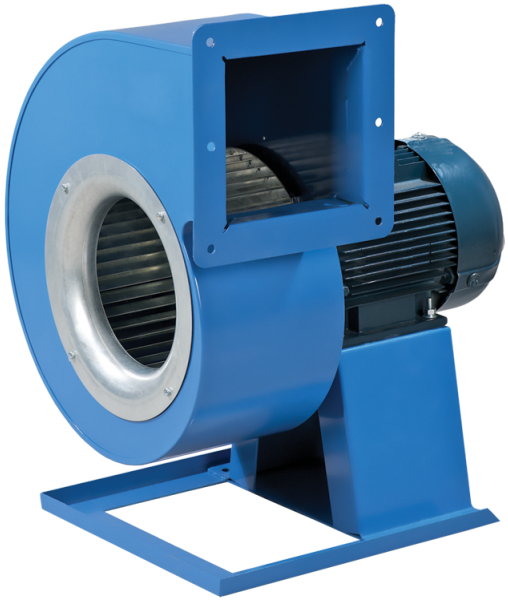

Radial fans

• Sound pressure level LpA at 3 m: 85
• Impeller type: Centrifugal impeller with forward curved blades
• Casing material: Coated steel

| | Unit of measurement | VCUN 500x229-11,0-4 R90 |
|---|---|---|
| Phases | - | 3 |
| Maximum supply voltage | V | 400 |
| Minimum supply voltage | V | 400 |
| Power supply frequency | Hz | 50 |
| Rated power | W | 11000 |
| Unit current | A | 24 |
| Maximum airflow | m³/h | 17250 |
| Rotation speed at 50hz | - | 1450 |
| Sound pressure level LpA at 3 m | dB(A) | 85 |
| Weight | kg | 107 |
| Transported air temperature (max) | °C | 60 |
| Ingress protection rating | - | IP54 |
| Ingress protection rating of the drive | - | IP54 |
| Impeller material | - | Galvanized steel |

## Dimensions

| ØD | Ød | Ød1 | B | H | H1 | H2 | H3 | L | L1 | L2 | P | M | I | G | K | S |
|---|---|---|---|---|---|---|---|---|---|---|---|---|---|---|---|---|
| 500 | 11 | 15 | 860 | 1115 | 390 | 341 | 534 | 761 | 401 | 353 | 408 | 500 | 645 | 42 | 580 | 178 |

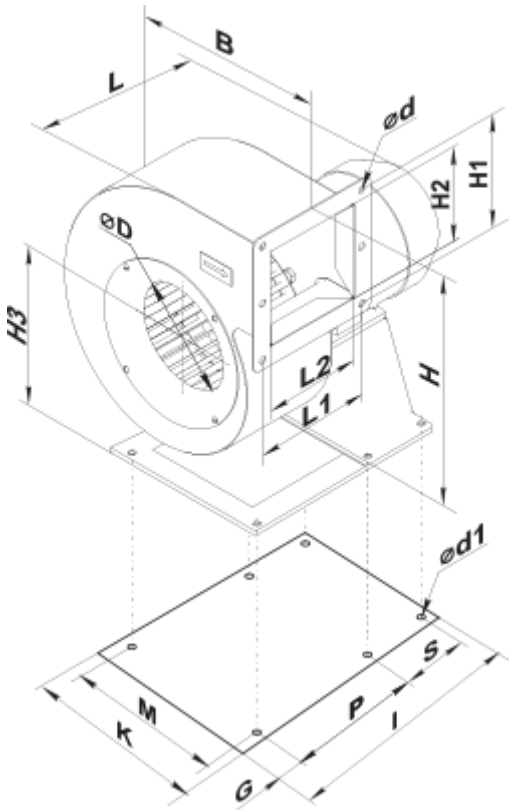


## Accessories

### Transformer speed controllers

| Name | Photo | Description |
|---|---|---|
| RSA5D-6,0-M |  | Three phase speed controller |
| RSA5D-8,0-M |  | Three phase speed controller |
| RSA5D-11,0-M |  | Three phase speed controller |