VK 150 Un

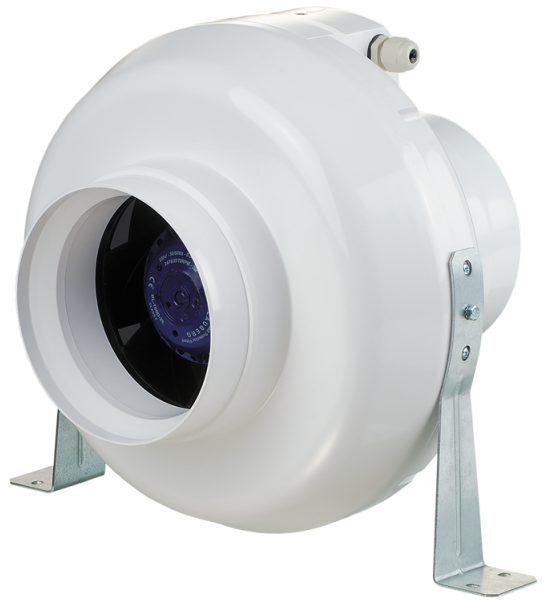

Centrifugal inline fans in plastic casing

• Sound pressure level LpA at 3 m: 42
• Control: Built-in speed controller
• Impeller type: Centrifugal impeller with backward curved blades
• Casing material: Polypropylene
• Installation in any position
• Cable with mains plug
• Temperature sensor

	Unit of measurement	VK 150 Un	
Connected air duct size	mm	150	
Phases	-	1	
Minimum supply voltage	V	230	
Maximum supply voltage	V	230	
Power supply frequency	Hz	50	60
Rated power	W	65	
Unit current	A	0.29	
Maximum airflow	m^3/h	460	
Rotation speed at 50hz	-	2725	
Sound pressure level LpA at 3 m	dB(A)	42	
Weight	kg	2.45	
Transported air temperature (max)	°C	55	
Transported air temperature (min)	°C	-25	
Ingress protection rating	-	IPX4	
Impeller material	-	Plastic	

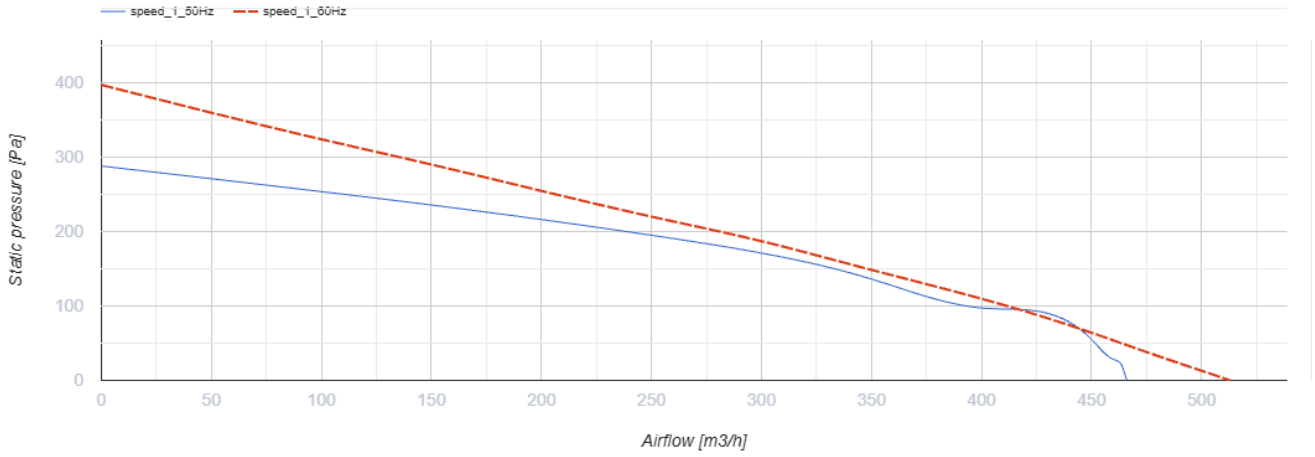

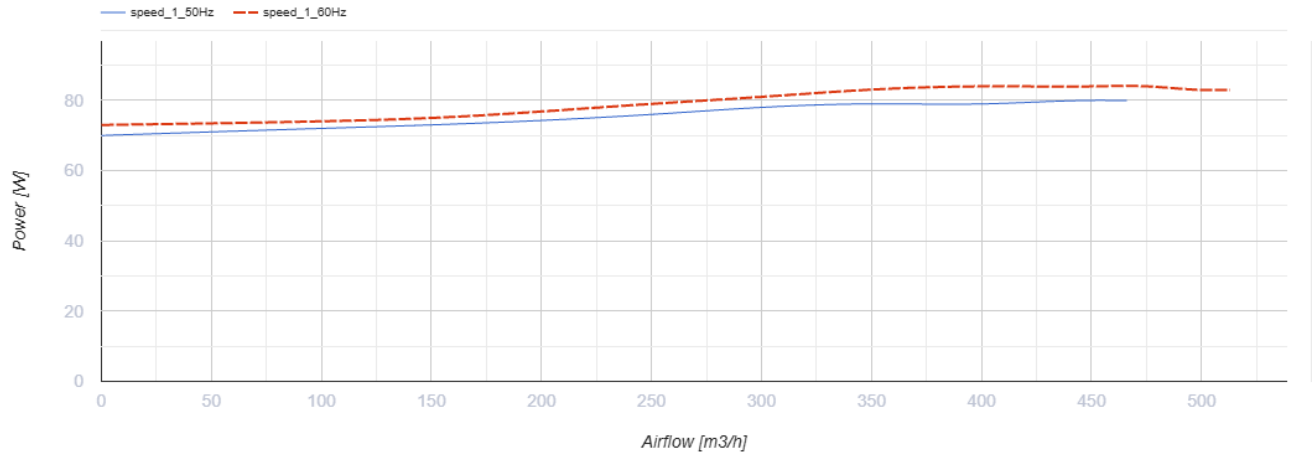

Dimensions

ØD	ØD1	B	L	L1	L2	L3
150	300	310	286	30	30	30

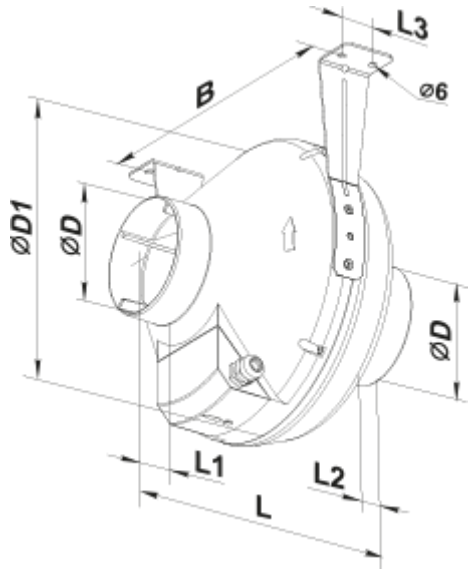

Ecodesign

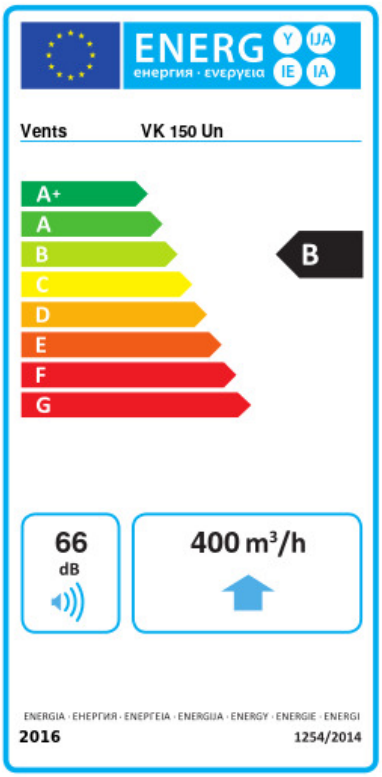

Trademark	Vents					
Model	VK 150 Un					
Specific energy consumption (SEC) (kWh/(m²/a))	Cold		Average		Warm	
	-53.7	A+	-26.6	B	-11.1	E
Type of ventilation unit	Unidirectional					
Type of drive installed	Variable speed					
Type of heat recovery system	None					
Maximum flow rate (m³/h)	400					
Electric power input (W)	80					
Reference flow rate (m³/s)	0.078					
Reference pressure difference (Pa)	50					
Specific power input (SPI) (W/(m³/h))	0.129					
Control typology	Local demand control					
Maximum external leakage rates (%)	2.7					
Declared typology	RVU UVU					
Sound power level (dB(A))	66					
The annual electricity consumption (AEC) (kWh/a)	Cold		Average		Warm	
	68		68		68	
The annual heating saved (AHS) (kWh/a)	Cold		Average		Warm	
	5536		2830		1280	