VK 250 P



Centrifugal inline fans in plastic casing

• Sound pressure level LpA at 3 m: 49
• Control: Built-in speed controller
• Impeller type: Centrifugal impeller with backward curved blades
• Casing material: Polypropylene
• Installation in any position
• Cable with mains plug

	Unit of measurement	VK 250 P	
Connected air duct size	mm	250	
Phases	-	1	
Minimum supply voltage	V	230	
Maximum supply voltage	V	230	
Power supply frequency	Hz	50	60
Rated power	W	171	
Unit current	A	0.75	
Maximum airflow	m³/h	1100	
Rotation speed at 50hz	-	2090	
Sound pressure level LpA at 3 m	dB(A)	49	
Weight	kg	4.3	
Transported air temperature (max)	°C	50	
Transported air temperature (min)	°C	-25	
Ingress protection rating	-	IPX4	
Impeller material	-	Plastic	

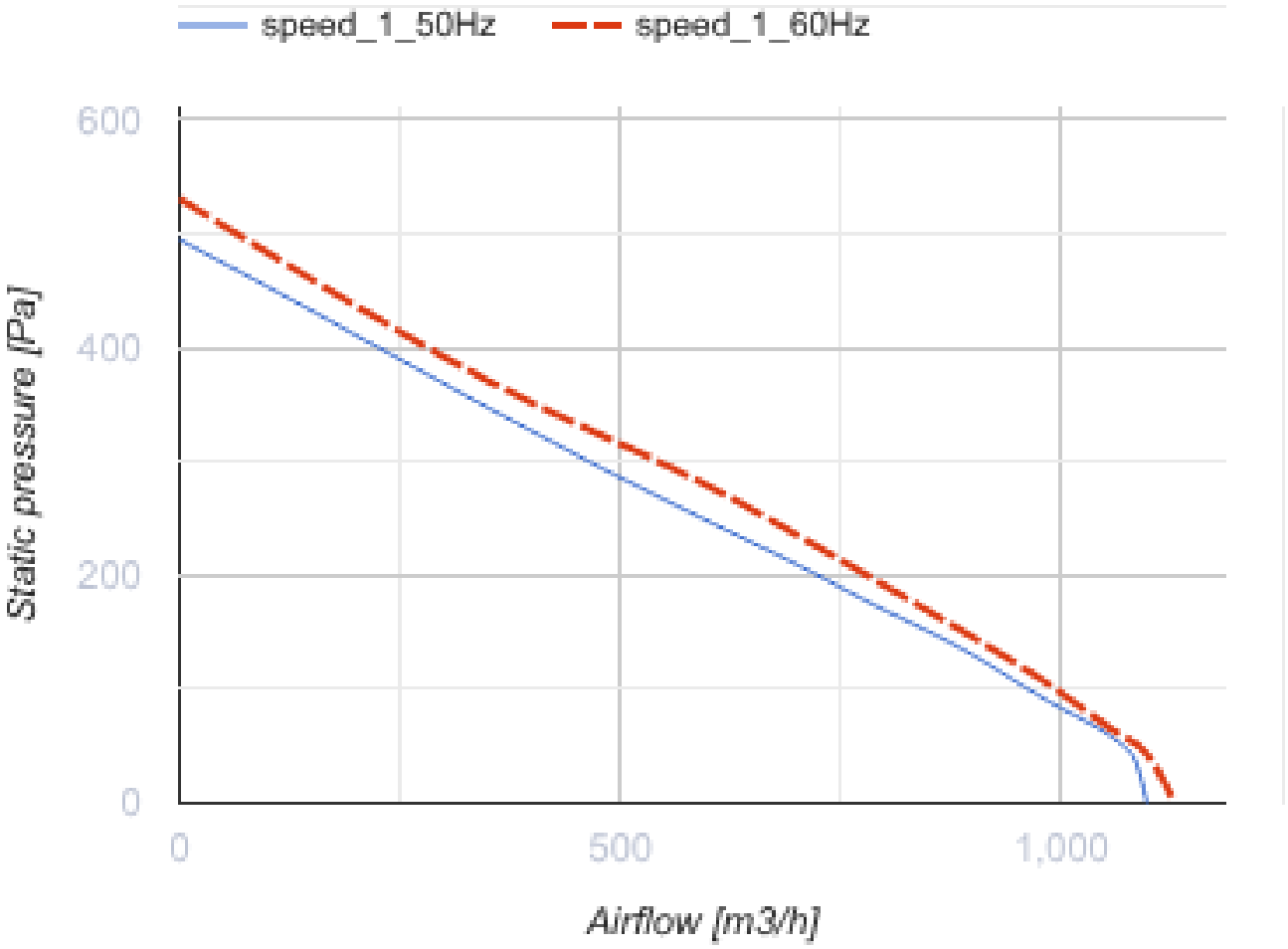
speed_1_50Hz
speed_1_60Hz
600
400
200
0
Static pressure [Pa]
0
500
1,000
Airflow [m3/h]

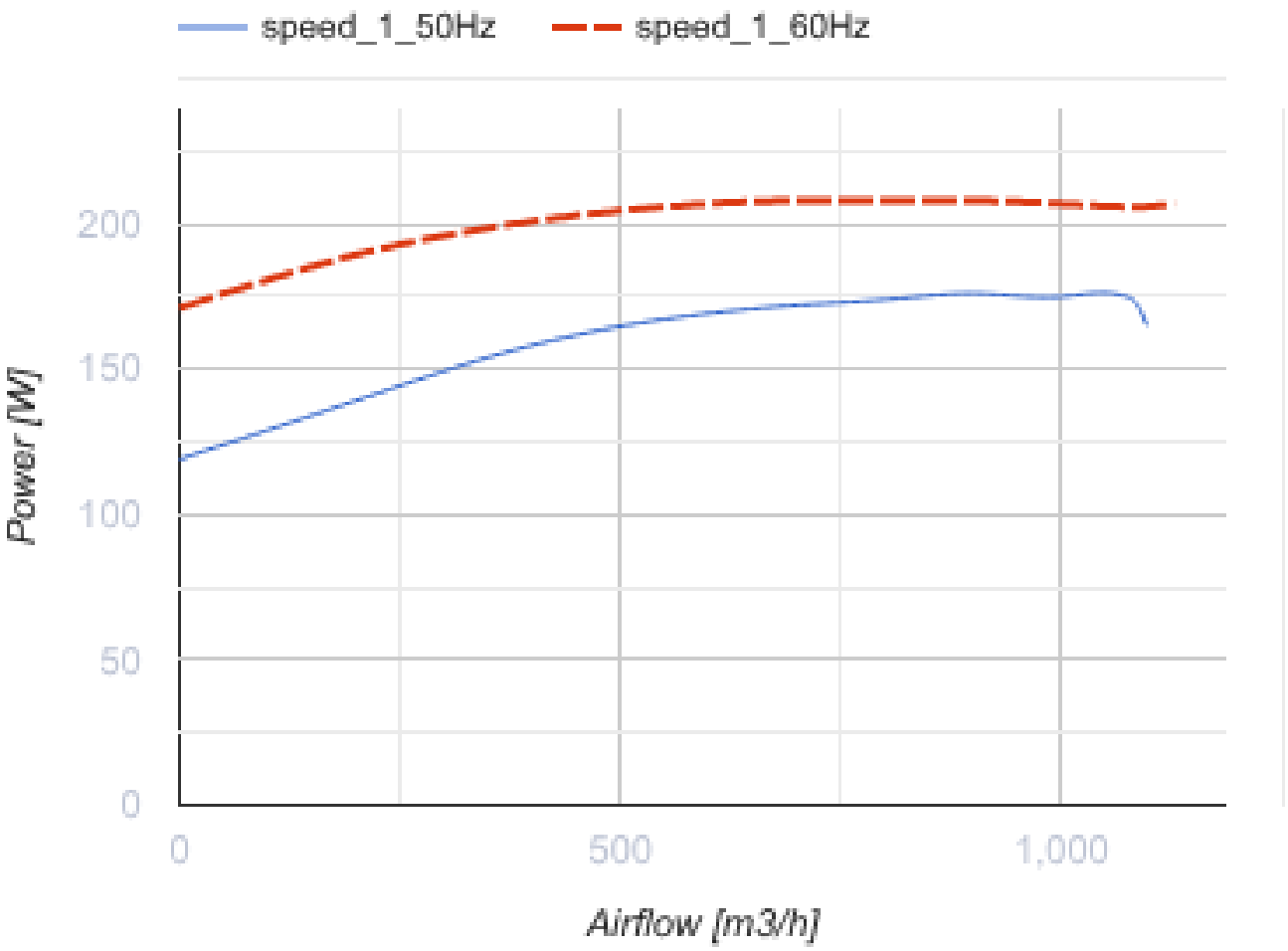

Dimensions

ØD	ØD1	B	L	L1	L2	L3
250	340	354	265	30	30	40

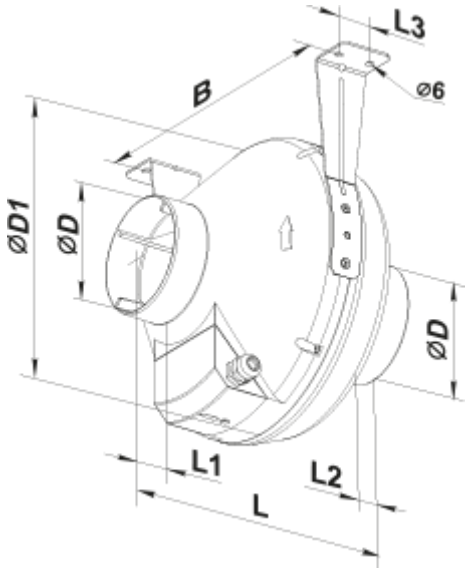
L3
B
⌀6
⌀D1
⌀D
⌀D
L1
L2
L

Ecodesign

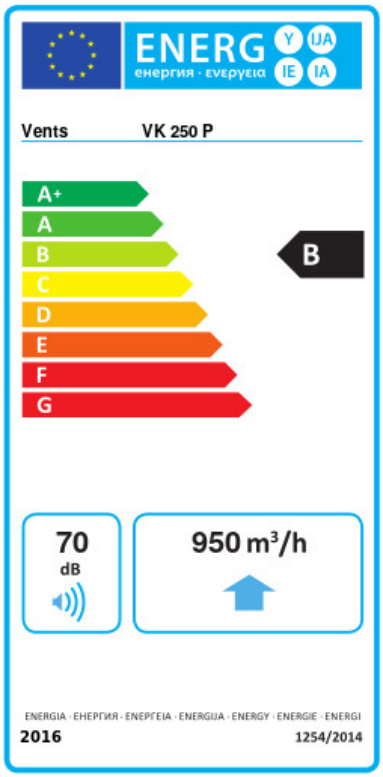

Trademark	Vents					
Model	VK 250 P					
Specific energy consumption (SEC) (kWh/(m²/a))	Cold		Average		Warm	
	-53.1	A+	-26	B	-10.5	E
Type of ventilation unit	Unidirectional					
Type of drive installed	Variable speed					
Type of heat recovery system	None					
Maximum flow rate (m³/h)	880					
Electric power input (W)	169					
Reference flow rate (m³/s)	0.171					
Reference pressure difference (Pa)	50					
Specific power input (SPI) (W/(m³/h))	0.17					
Control typology	Local demand control					
Maximum external leakage rates (%)	2.7					
Declared typology	RVU UVU					
Sound power level (dB(A))	69					
The annual electricity consumption (AEC) (kWh/a)	Cold		Average		Warm	
	90		90		90	
The annual heating saved (AHS) (kWh/a)	Cold		Average		Warm	
	5536		2830		1280	