VK 315 Duo R1V



Inline centrifugal fans in plastic casing

• Sound pressure level LpA at 3 m: 48
• Control: Built-in speed controller
• Impeller type: Centrifugal impeller with backward curved blades
• Casing material: Plastic
• Installation in any position
• Cable with mains plug

	Unit of measurement	VK 315 Duo R1V	
Speed	-	1	2
Connected air duct size	mm	315	
Phases	-	1	
Maximum supply voltage	V	230	
Minimum supply voltage	V	230	
Power supply frequency	Hz	50	
Rated power	W	143	173
Unit current	A	0.68	0.76
Maximum airflow	m^3/h	758	1268
Rotation speed at 50hz	-	1870	2410
Sound pressure level LpA at 3 m	dB(A)	37	48
Weight	kg	4.85	
Transported air temperature (max)	°C	55	
Transported air temperature (min)	°C	-25	
Ingress protection rating	-	IPX4	
Impeller material	-	Plastic	

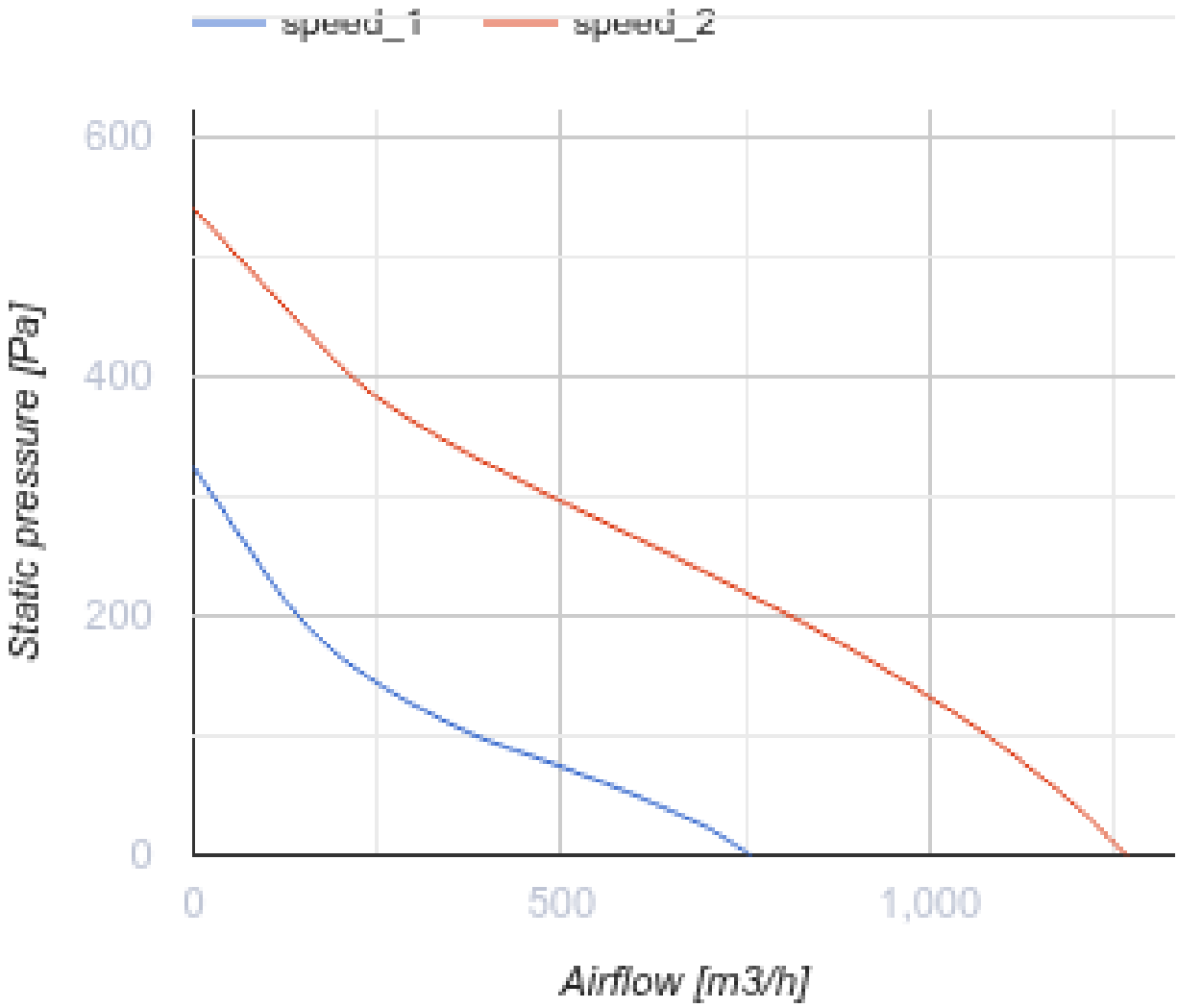
speed_1
speed_2
600
400
200
0
Static pressure [Pa]
0
500
1,000
Airflow [m3/h]

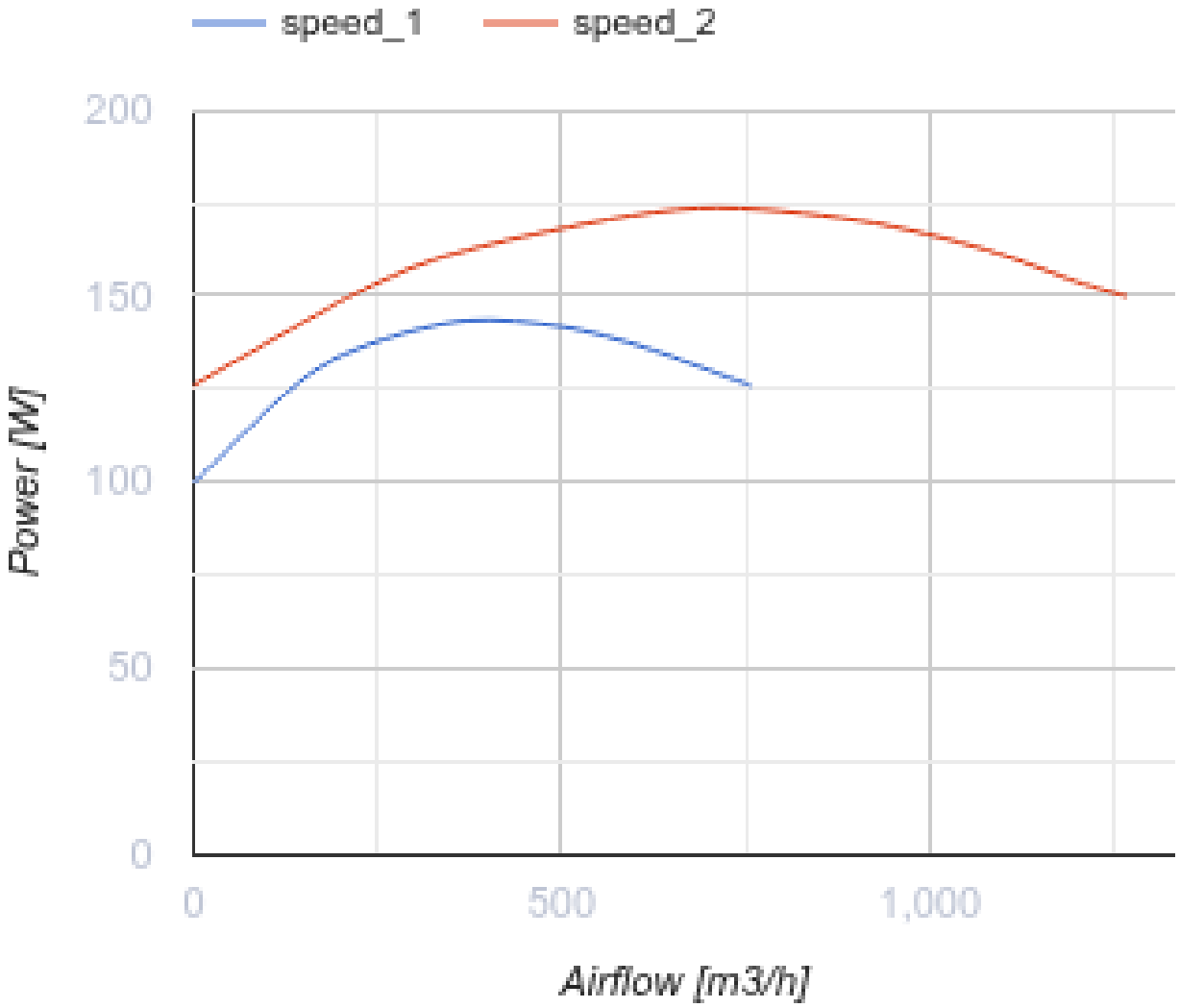

Dimensions

ØD	ØD1	B	L	L1	L2	L3
315	400	414	276	40	55	40

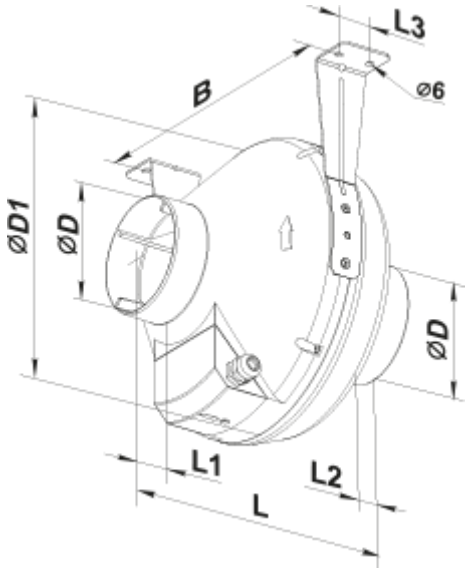
L3
B
⌀6
⌀D1
⌀D
⌀D
L1
L2
L