VK 315 P



Centrifugal inline fans in plastic casing

• Sound pressure level LpA at 3 m: 49
• Control: Built-in speed controller
• Impeller type: Centrifugal impeller with backward curved blades
• Casing material: Polypropylene
• Installation in any position
• Cable with mains plug

	Unit of measurement	VK 315 P	
Connected air duct size	mm	315	
Phases	-	1	
Minimum supply voltage	V	230	
Maximum supply voltage	V	230	
Power supply frequency	Hz	50	60
Rated power	W	169	
Unit current	A	0.74	
Maximum airflow	m³/h	1240	
Rotation speed at 50hz	-	2655	
Sound pressure level LpA at 3 m	dB(A)	49	
Weight	kg	4.85	
Transported air temperature (max)	°C	50	
Transported air temperature (min)	°C	-25	
Ingress protection rating	-	IPX4	
Impeller material	-	Plastic	

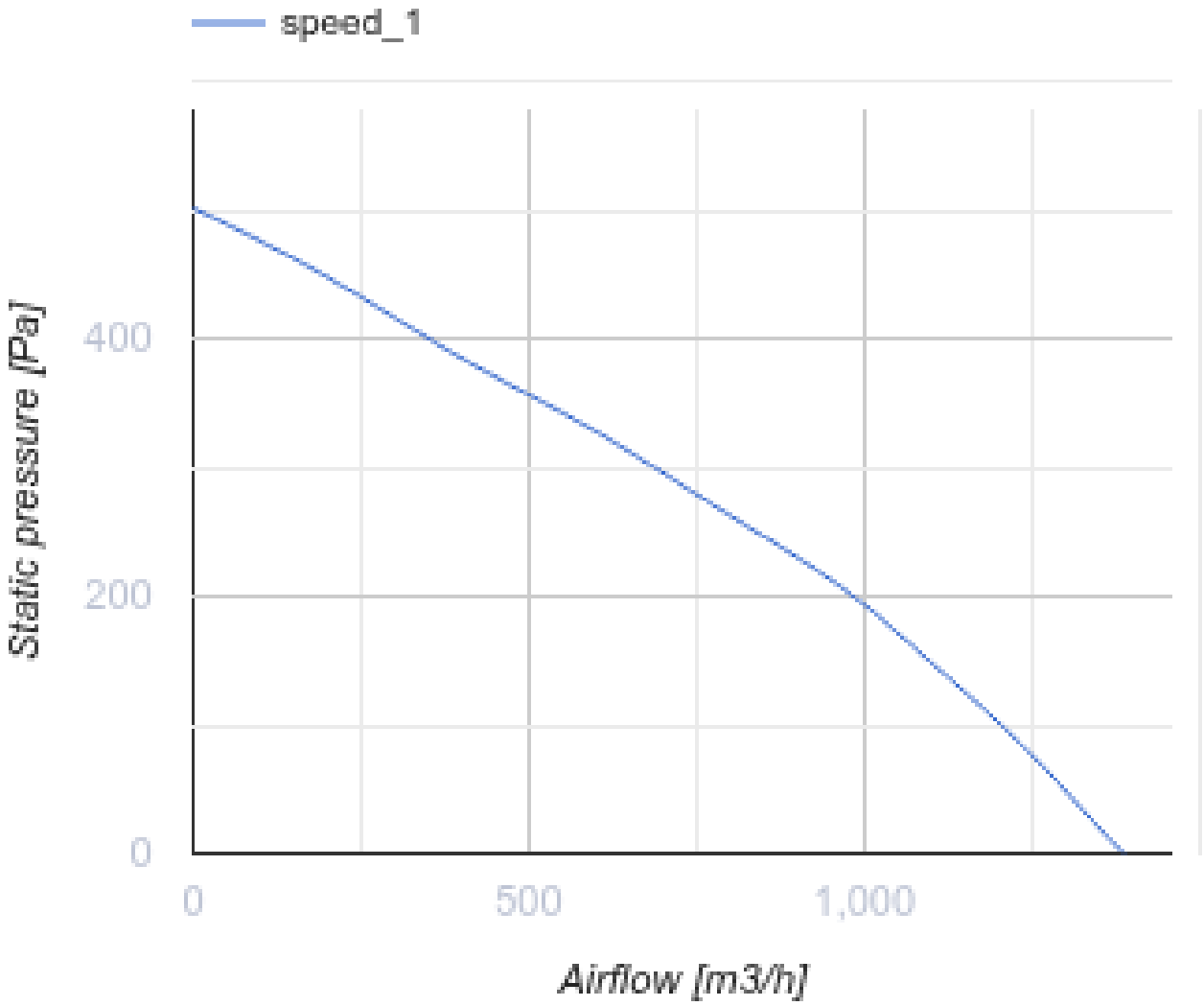
speed_1
Static pressure [Pa]
400
200
0
0
500
1,000
Airflow [m3/h]

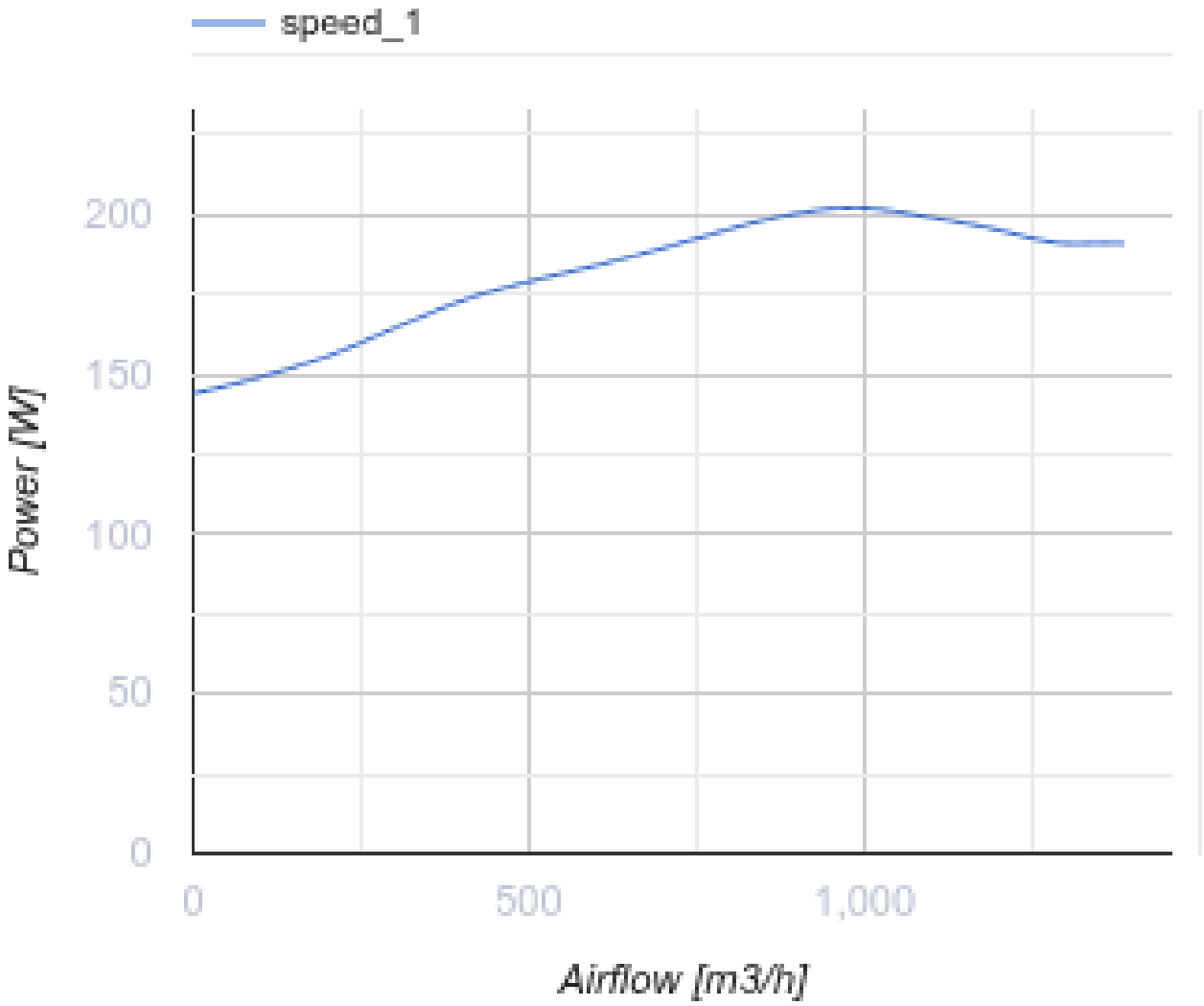

Dimensions

ØD	ØD1	B	L	L1	L2	L3
315	400	414	276	40	55	40

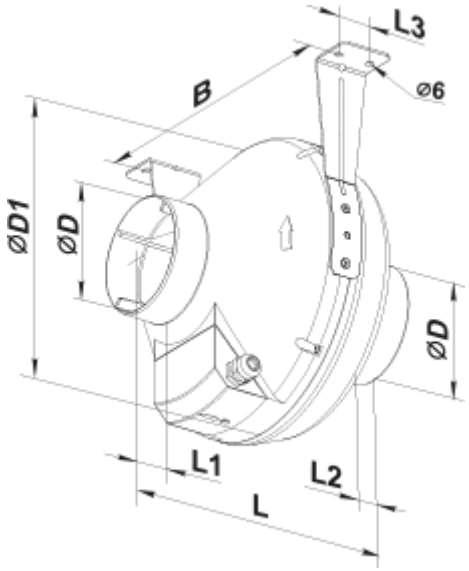
L3
B
⌀6
⌀D1
⌀D
⌀D
L1
L2
L

Ecodesign

Trademark	Vents					
Model	VK 315 P					
Specific energy consumption (SEC) (kWh/(m²/a))	Cold		Average		Warm	
	-53.3	A+	-26.2	B	-10.7	E
Type of ventilation unit	Unidirectional					
Type of drive installed	External MSD or VSD					
Type of heat recovery system	None					
Maximum flow rate (m³/h)	1010					
Electric power input (W)	160					
Reference flow rate (m³/s)	0.196					
Reference pressure difference (Pa)	50					
Nominal external pressure (Pa)	237					
Specific power input (SPI) (W/(m³/h))	0.158					
Control typology	Local demand control					
Maximum external leakage rates (%)	2.7					
Static efficiency (%)	30.2					
Declared typology	NRVU UVU					
Effective electric power input (kW)	0.194					
Sound power level (dB(A))	69					
The annual electricity consumption (AEC) (kWh/a)	Cold		Average		Warm	
	84		84		84	
The annual heating saved (AHS) (kWh/a)	Cold		Average		Warm	
	5536		2830		1280	