VKF 2E 250



Inline axial fans

- Sound pressure level LpA at 3 m: 50
- Impeller type: Axial
- Casing material: Coated steel
- Installation in any position

	Unit of measurement	VKF 2E 250	
Connected air duct size	mm	250	
Phases	-	1	
Minimum supply voltage	V	220	
Maximum supply voltage	V	240	
Power supply frequency	Hz	50	60
Rated power	W	80	
Unit current	A	0.4	
Maximum airflow	m³/h	1050	
Rotation speed at 50hz	-	2400	
Sound pressure level LpA at 3 m	dB(A)	50	
Weight	kg	3.9	
Transported air temperature (max)	°C	60	
Transported air temperature (min)	°C	-30	
Ingress protection rating	-	IPX4	
Ingress protection rating of the drive	-	IP54	
Impeller material	-	Coated steel	

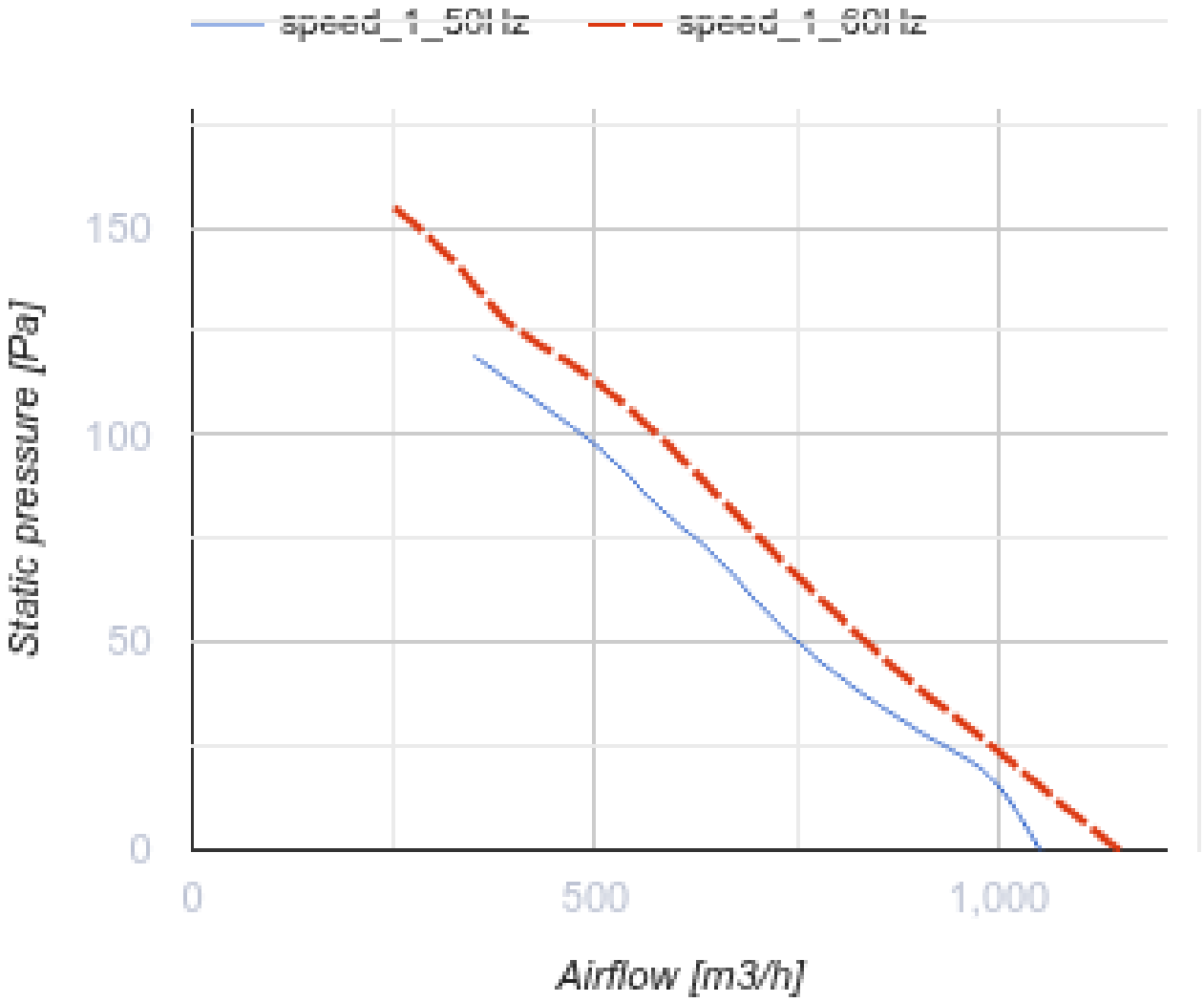
speed_1_50Hz
speed_1_60Hz
150
100
50
0
Static pressure [Pa]
0
500
1,000
Airflow [m3/h]

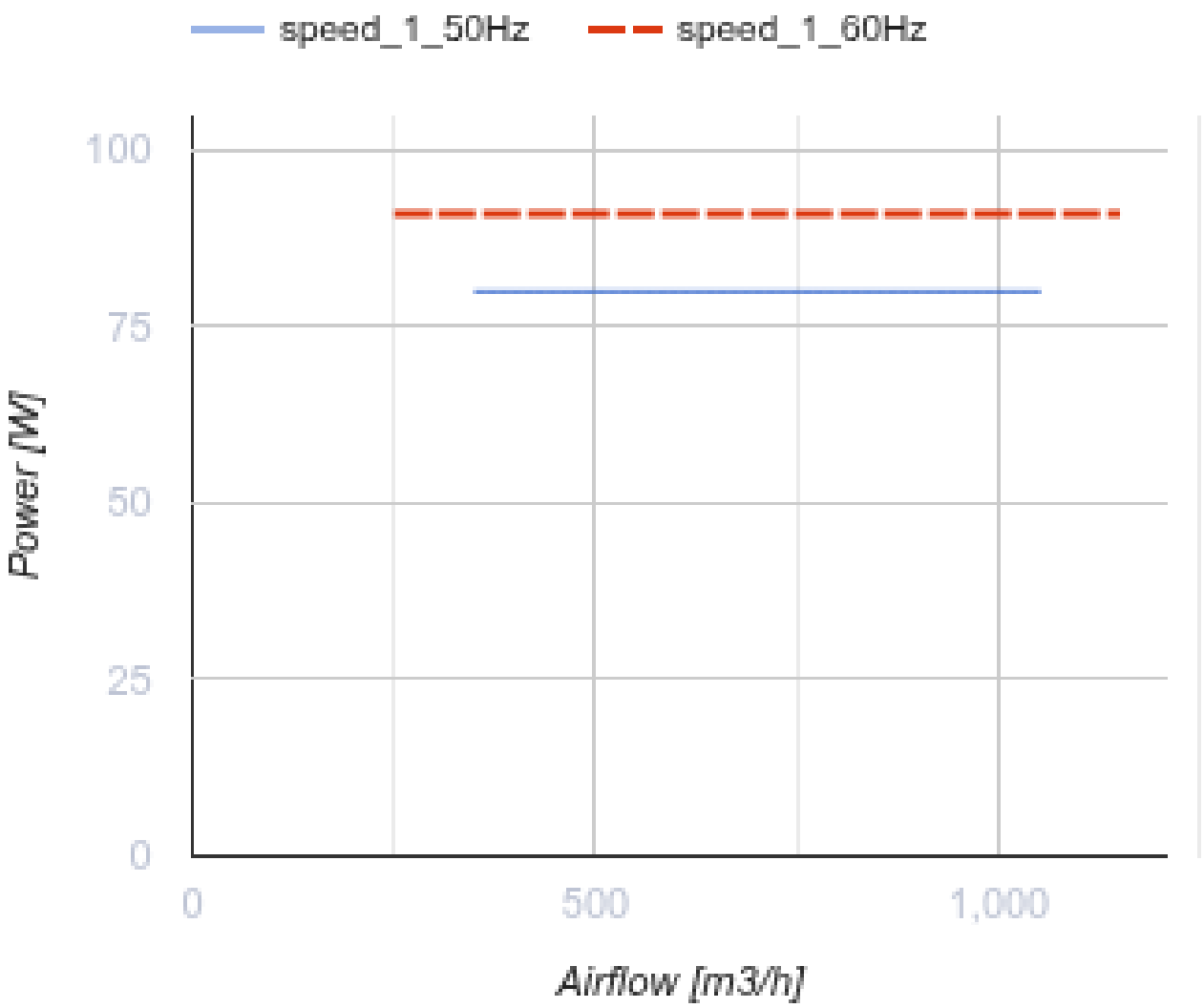

Dimensions

ØD	ØD1	ØD2	Ød	B	L
260	286	306	7	340	150

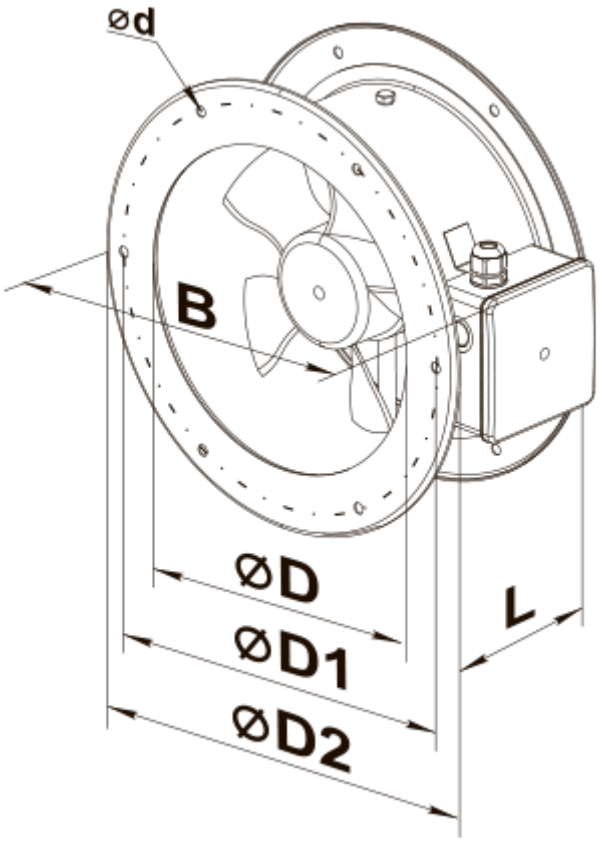
ød
B
ØD
ØD1
ØD2
L

Ecodesign

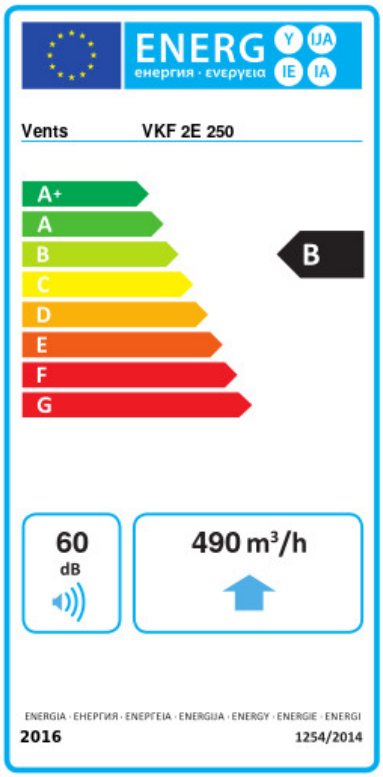

Trademark	Vents					
Model	VKF 2E 250					
Specific energy consumption (SEC) (kWh/(m²/a))	Cold		Average		Warm	
	-53.7	A+	-26.6	B	-11.1	E
Type of ventilation unit	Unidirectional					
Type of drive installed	Variable speed					
Type of heat recovery system	None					
Maximum flow rate (m³/h)	490					
Electric power input (W)	80					
Reference flow rate (m³/s)	0.095					
Reference pressure difference (Pa)	50					
Specific power input (SPI) (W/(m³/h))	0.128					
Control typology	Local demand control					
Maximum external leakage rates (%)	2.7					
Sound power level (dB(A))	60					
Declared typology	RVU UVU					
The annual electricity consumption (AEC) (kWh/a)	Cold		Average		Warm	
	68		68		68	
The annual heating saved (AHS) (kWh/a)	Cold		Average		Warm	
	5536		2830		1280	