VKF 4D 300



Inline axial fans

- Sound pressure level LpA at 3 m: 45
- Impeller type: Axial
- Casing material: Coated steel
- Installation in any position

	Unit of measurement	VKF 4D 300	
Connected air duct size	mm	300	
Phases	-	3	
Minimum supply voltage	V	400	
Maximum supply voltage	V	400	
Power supply frequency	Hz	50	60
Rated power	W	75	
Unit current	A	0.22	
Maximum airflow	m³/h	1310	
Rotation speed at 50hz	-	1380	
Sound pressure level LpA at 3 m	dB(A)	45	
Weight	kg	6.2	
Transported air temperature (max)	°C	60	
Transported air temperature (min)	°C	-30	
Ingress protection rating	-	IPX4	
Ingress protection rating of the drive	-	IP54	
Impeller material	-	Coated steel	

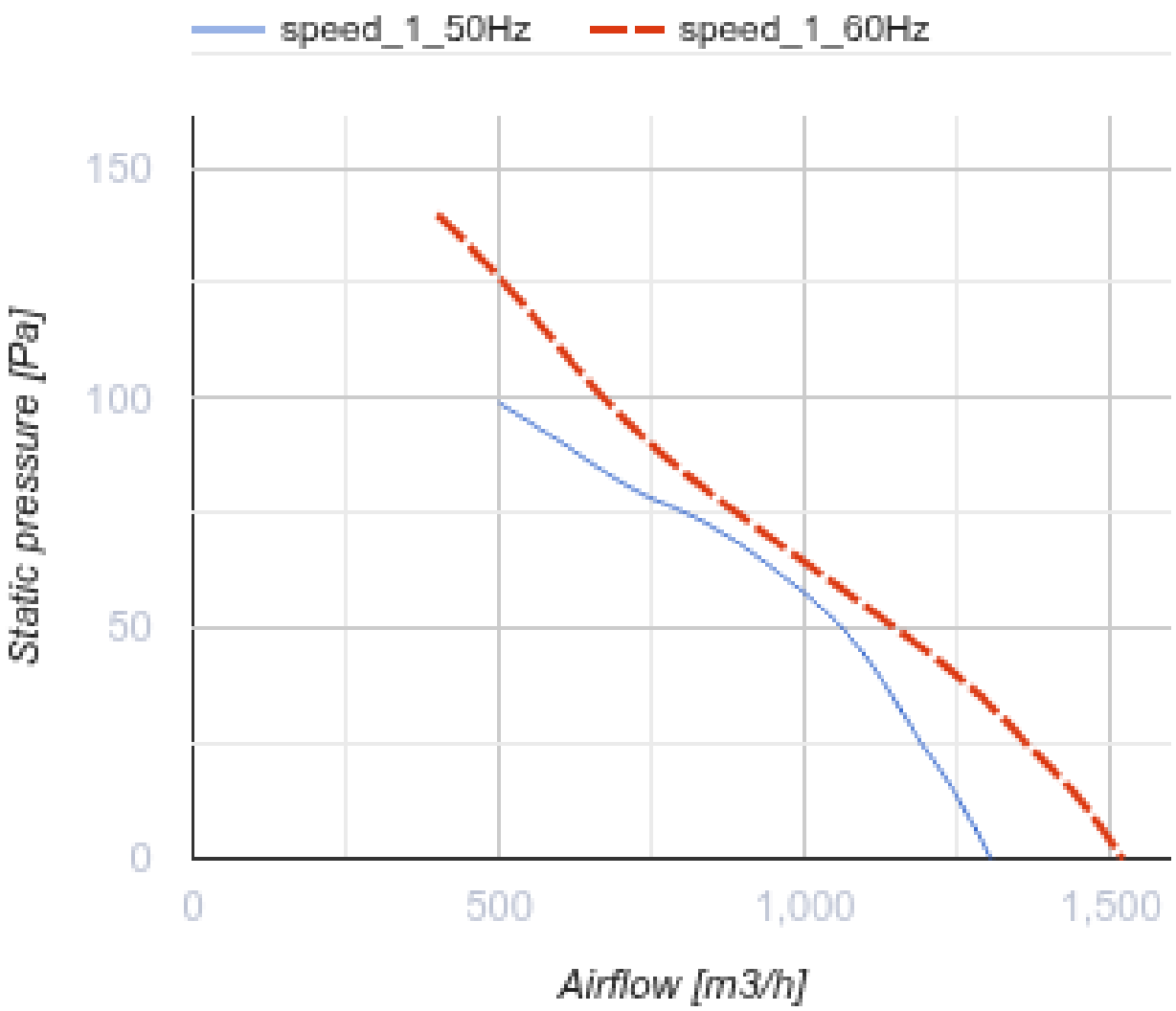
speed_1_50Hz
speed_1_60Hz
150
100
50
0
Static pressure [Pa]
0
500
1,000
1,500
Airflow [m3/h]

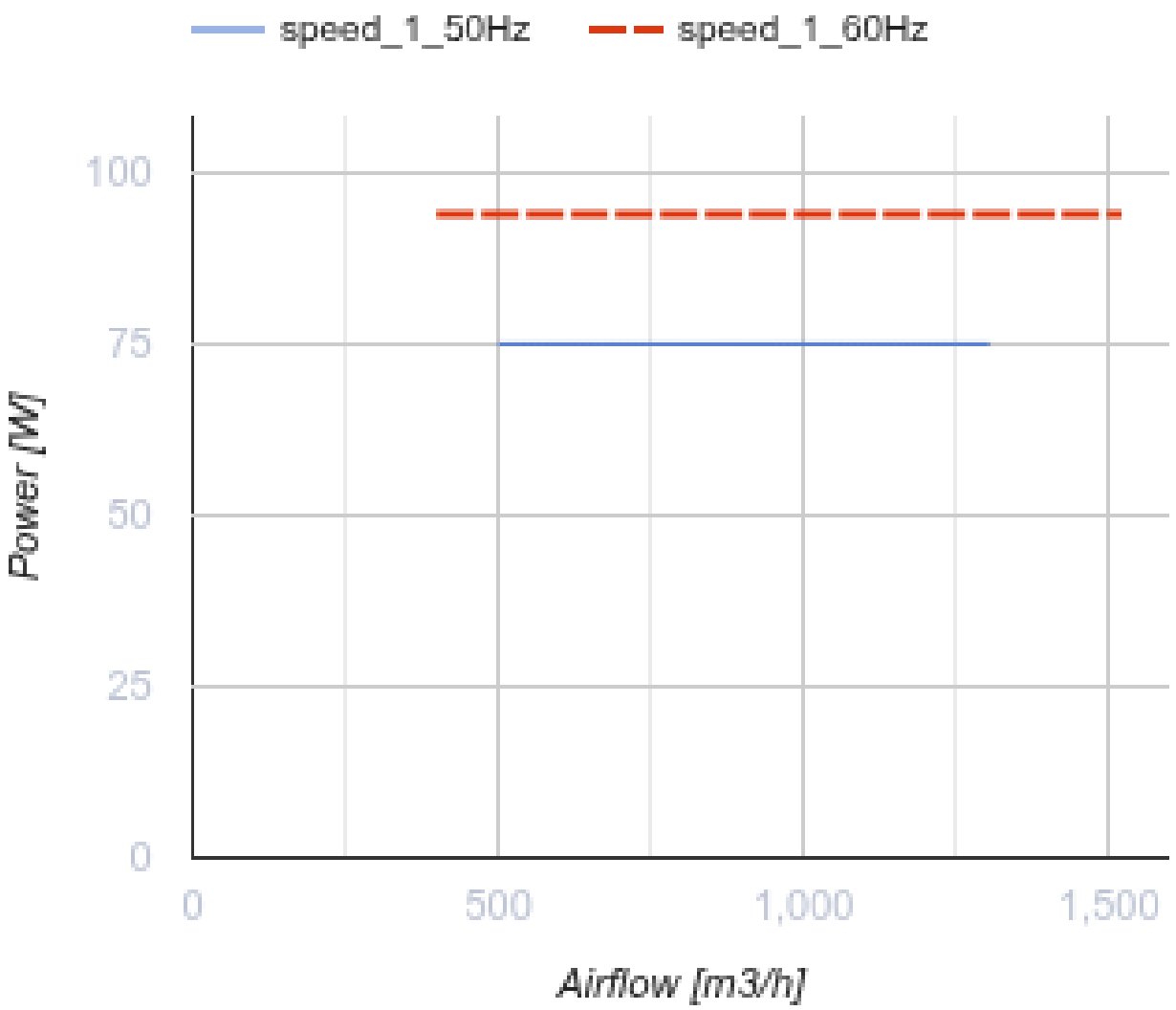

Dimensions

ØD	ØD1	ØD2	Ød	B	L
310	356	382	7	410	160

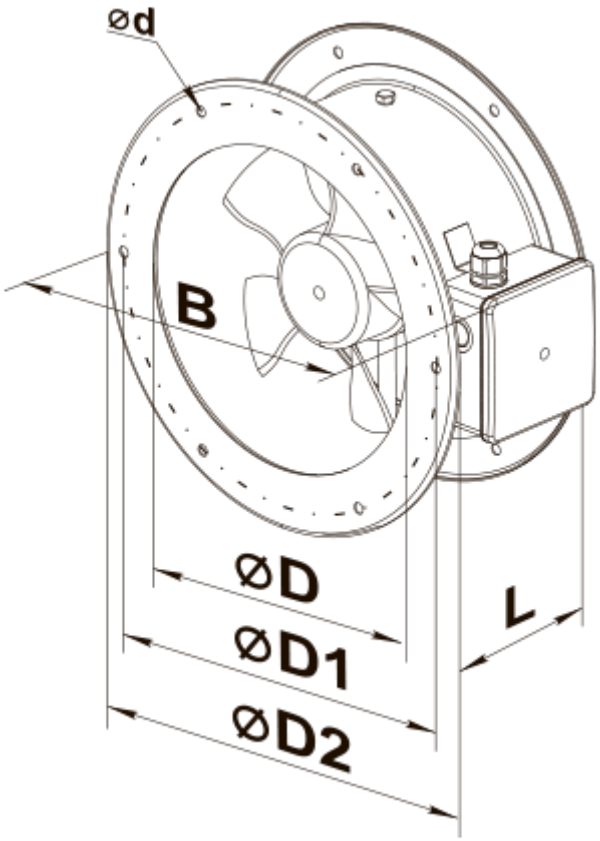
ød
B
ØD
ØD1
ØD2
L

Ecodesign

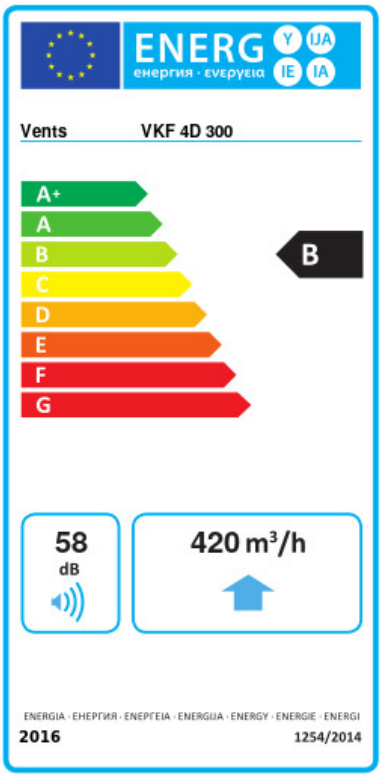

Trademark	Vents					
Model	VKF 4D 300					
Specific energy consumption (SEC) (kWh/(m²/a))	Cold		Average		Warm	
	-53.5	A+	-26.4	B	-10.9	E
Type of ventilation unit	Unidirectional					
Type of drive installed	Variable speed					
Type of heat recovery system	None					
Maximum flow rate (m³/h)	420					
Electric power input (W)	75					
Reference flow rate (m³/s)	0.082					
Reference pressure difference (Pa)	50					
Specific power input (SPI) (W/(m³/h))	0.14					
Control typology	Local demand control					
Maximum external leakage rates (%)	2.7					
Declared typology	RVU UVU					
Sound power level (dB(A))	58					
The annual electricity consumption (AEC) (kWh/a)	Cold		Average		Warm	
	74		74		74	
The annual heating saved (AHS) (kWh/a)	Cold		Average		Warm	
	5536		2830		1280	