VKF 4D 450



Inline axial fans

- Sound pressure level LpA at 3 m: 56
- Impeller type: Axial
- Casing material: Coated steel
- Installation in any position

	Unit of measurement	VKF 4D 450
Connected air duct size	mm	450
Phases	-	3
Minimum supply voltage	V	400
Maximum supply voltage	V	400
Power supply frequency	Hz	50
Rated power	W	250
Unit current	A	0.6
Maximum airflow	m³/h	5280
Rotation speed at 50hz	-	1360
Sound pressure level LpA at 3 m	dB(A)	56
Weight	kg	9.1
Transported air temperature (max)	°C	60
Transported air temperature (min)	°C	-30
Ingress protection rating	-	IPX4
Ingress protection rating of the drive	-	IP54
Impeller material	-	Coated steel

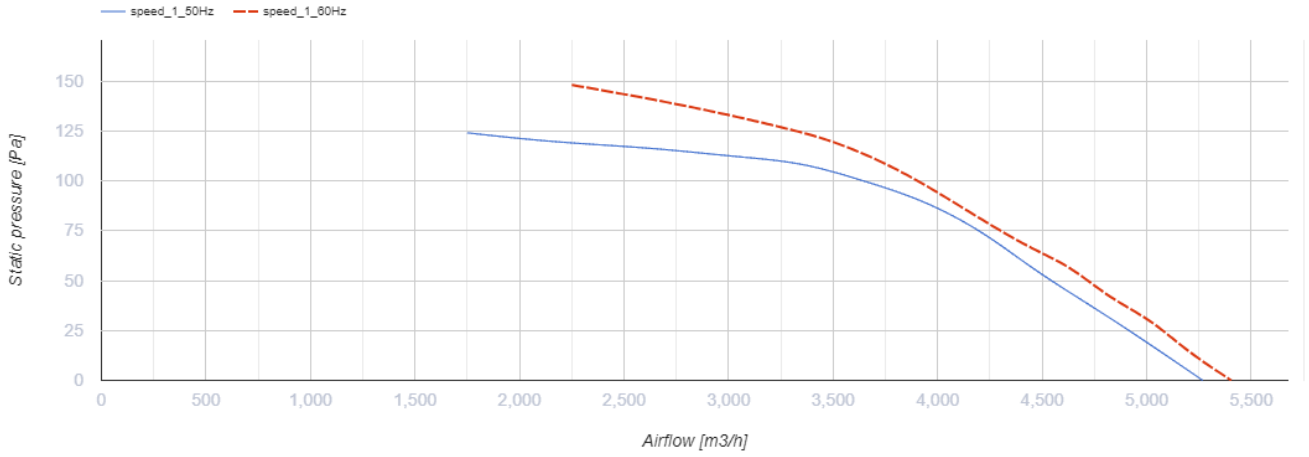

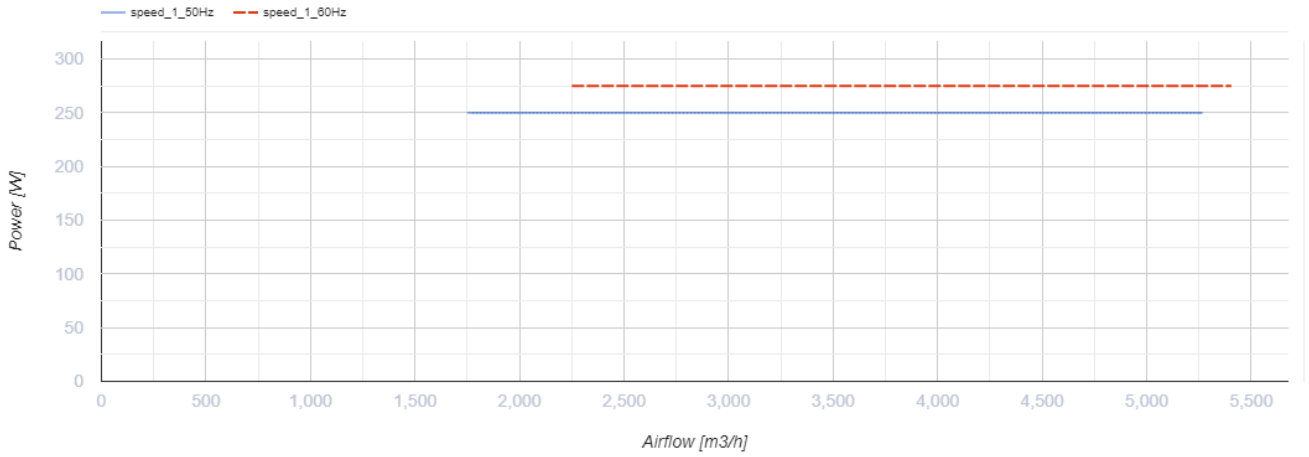

Dimensions

ØD	ØD1	ØD2	Ød	B	L
462	487	515	9.5	550	200

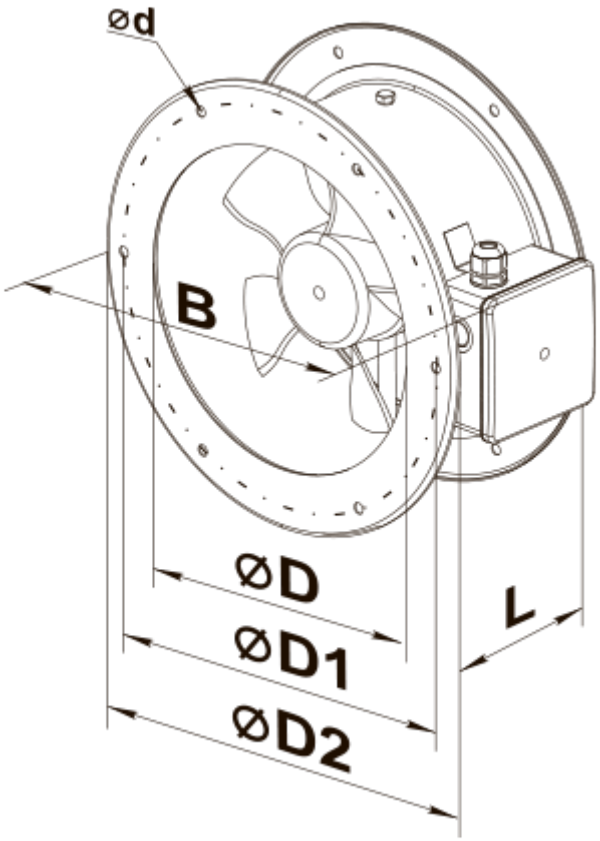
ød
B
ØD
ØD1
ØD2
L

Ecodesign

Trademark	Vents
Model	VKF 4D 450
Type of drive installed	External MSD or VSD
Type of heat recovery system	None
Nominal external pressure (Pa)	100
Maximum external leakage rates (%)	2.7
Static efficiency (%)	35
Declared typology	NRVU UVU
Effective electric power input (kW)	0.296
Sound power level (dB(A))	85