VKF 4D 630



Inline axial fans

- Sound pressure level LpA at 3 m: 69
- Impeller type: Axial
- Casing material: Coated steel
- Installation in any position

	Unit of measurement	VKF 4D 630
Connected air duct size	mm	630
Phases	-	3
Maximum supply voltage	V	400
Minimum supply voltage	V	400
Power supply frequency	Hz	50
Rated power	W	800
Unit current	A	1.6
Maximum airflow	m³/h	12200
Rotation speed at 50hz	-	1320
Sound pressure level LpA at 3 m	dB(A)	69
Weight	kg	16.4
Transported air temperature (max)	°C	60
Transported air temperature (min)	°C	-30
Ingress protection rating	-	IPX4
Ingress protection rating of the drive	-	IP54
Impeller material	-	Coated steel

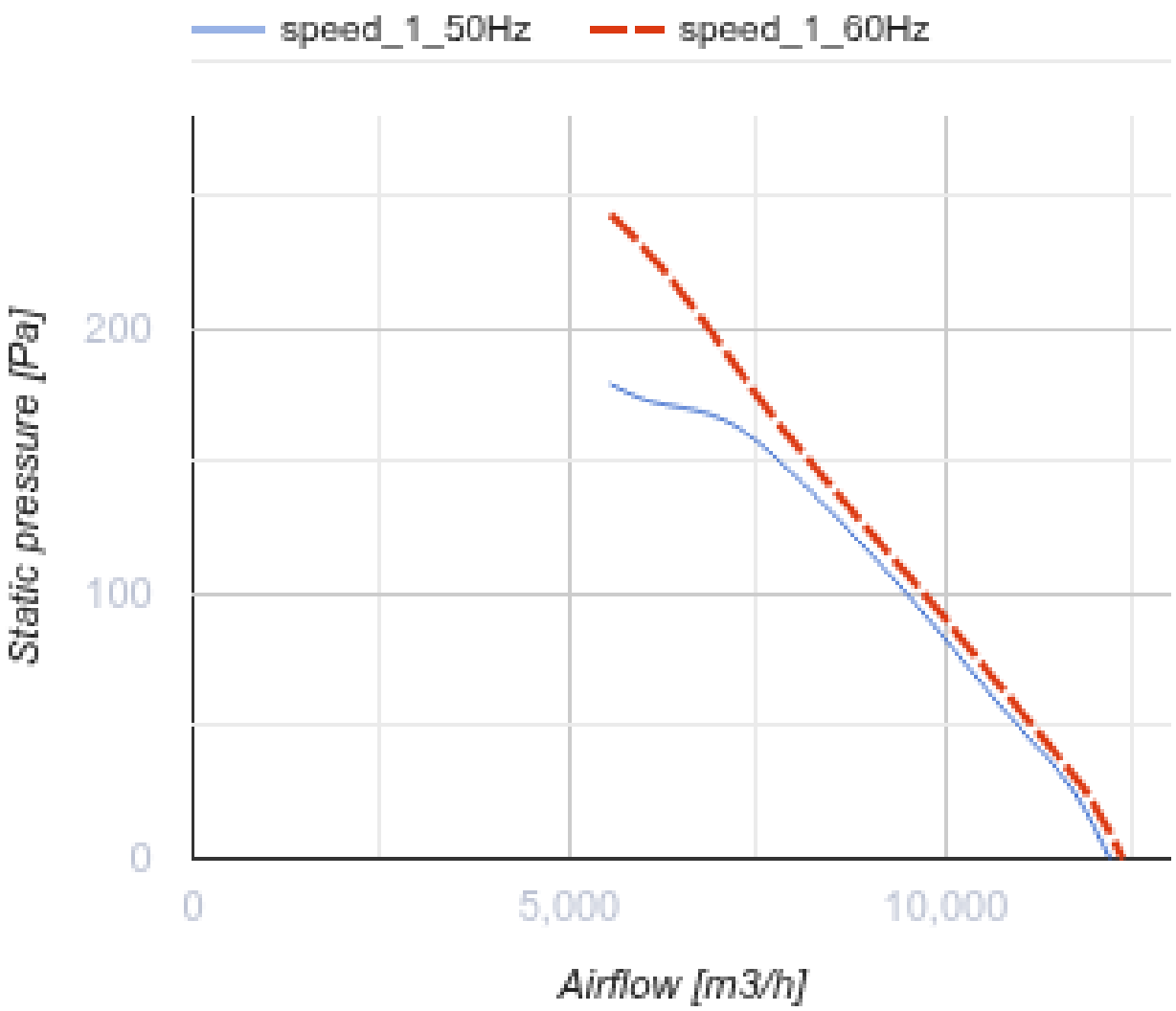
speed_1_50Hz
speed_1_60Hz
Static pressure [Pa]
200
100
0
0
5,000
10,000
Airflow [m3/h]

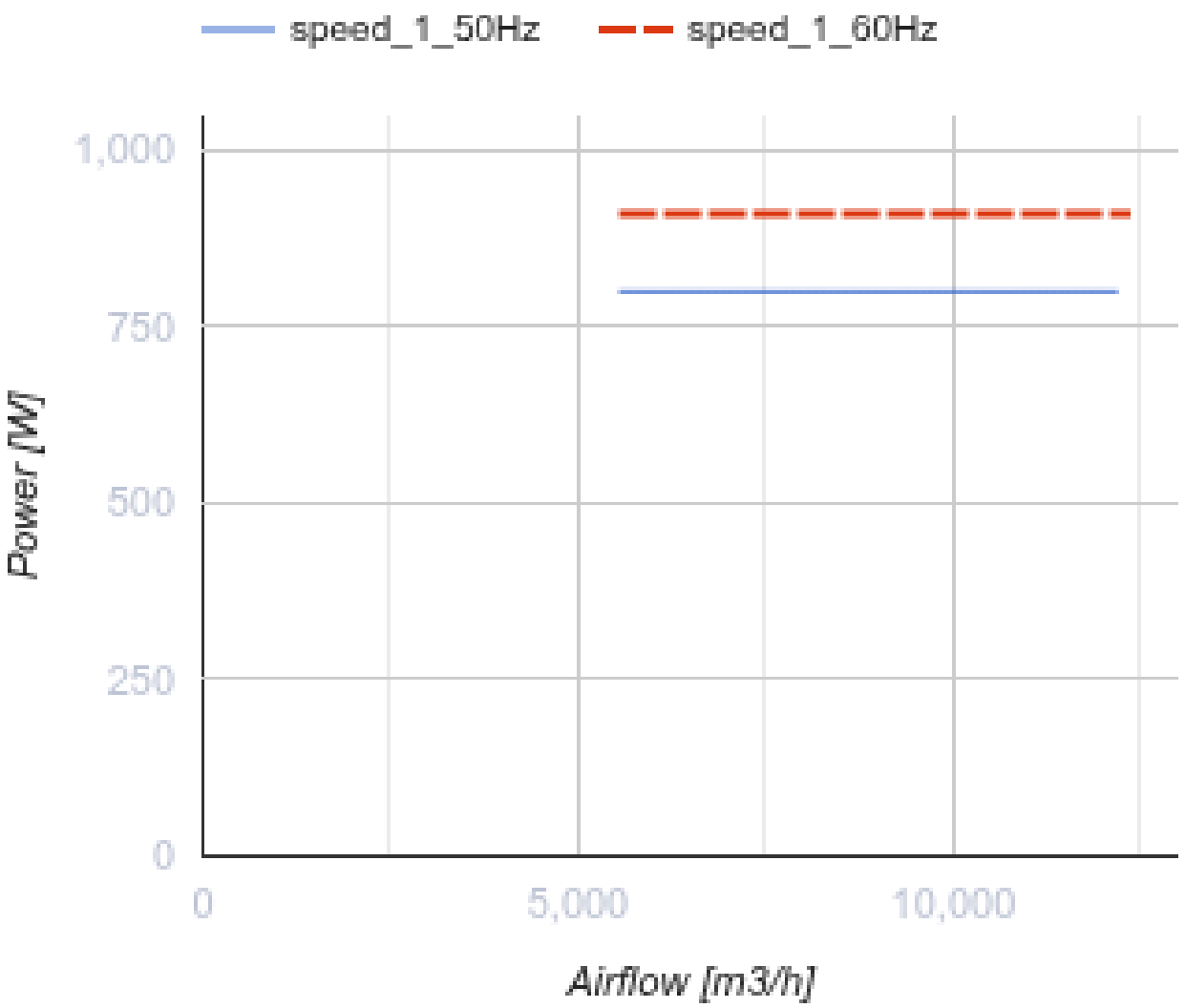

Dimensions

ØD	ØD1	ØD2	Ød	B	L
645	674	715	11.5	740	250

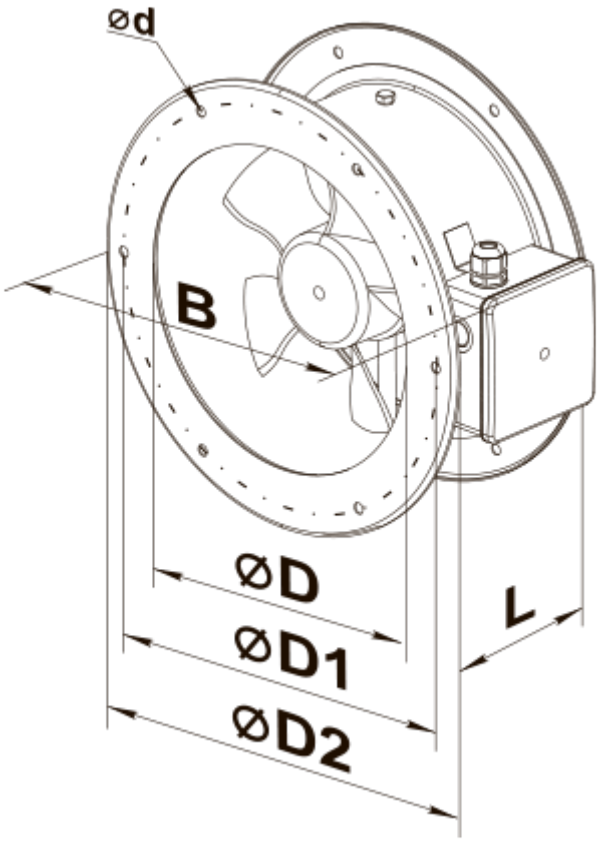
ød
B
ØD
ØD1
ØD2
L