VKF 4E 400



Inline axial fans

- Sound pressure level LpA at 3 m: 53
- Impeller type: Axial
- Casing material: Coated steel
- Installation in any position

	Unit of measurement	VKF 4E 400	
Connected air duct size	mm	400	
Phases	-	1	
Minimum supply voltage	V	220	
Maximum supply voltage	V	240	
Power supply frequency	Hz	50	60
Rated power	W	180	
Unit current	A	0.82	
Maximum airflow	m³/h	3580	
Rotation speed at 50hz	-	1380	
Sound pressure level LpA at 3 m	dB(A)	53	
Weight	kg	8.1	
Transported air temperature (max)	°C	60	
Transported air temperature (min)	°C	-30	
Ingress protection rating	-	IPX4	
Ingress protection rating of the drive	-	IP54	
Impeller material	-	Coated steel	

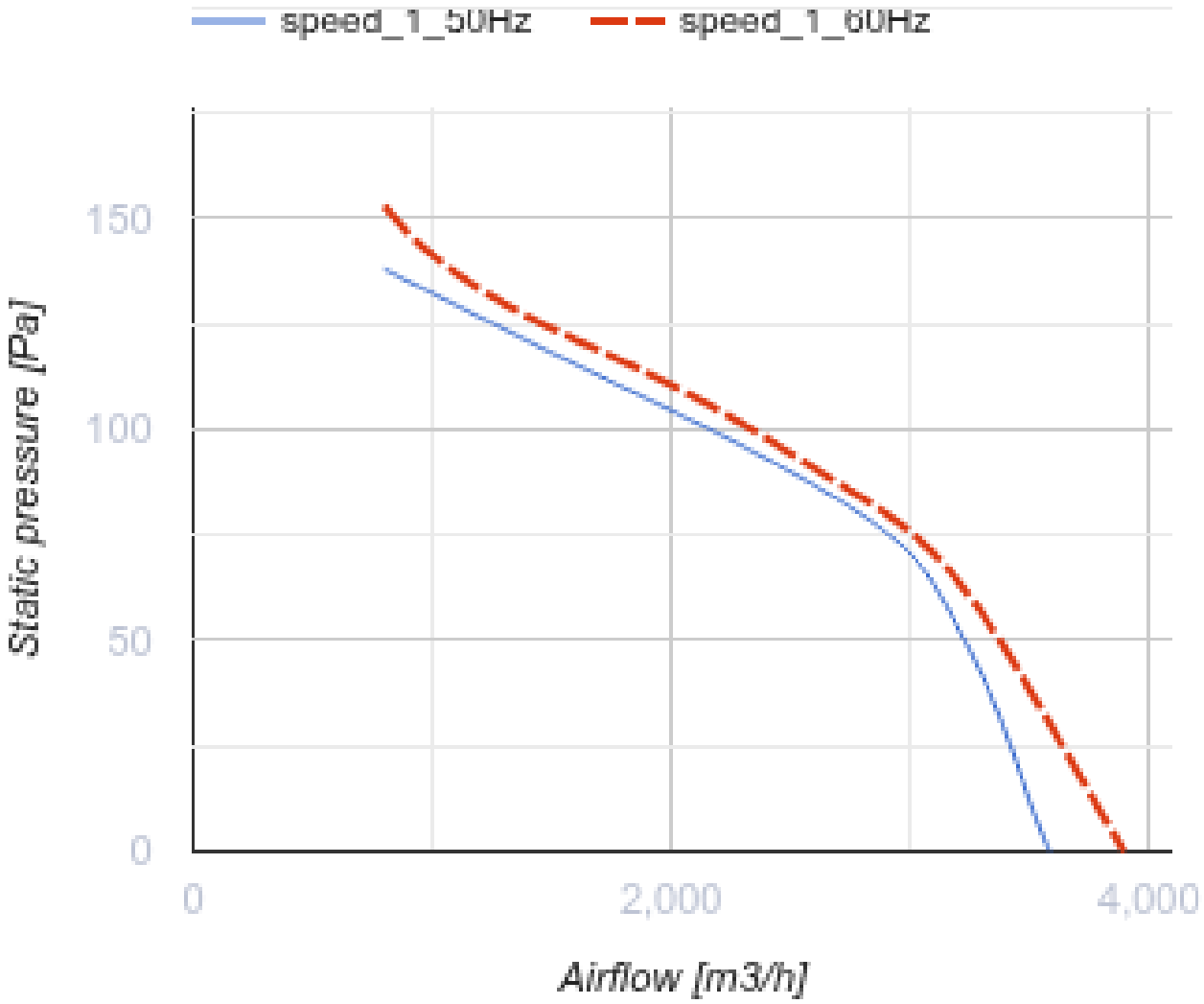
speed_1_50Hz
speed_1_60Hz
150
100
50
0
Static pressure [Pa]
0
2,000
4,000
Airflow [m3/h]

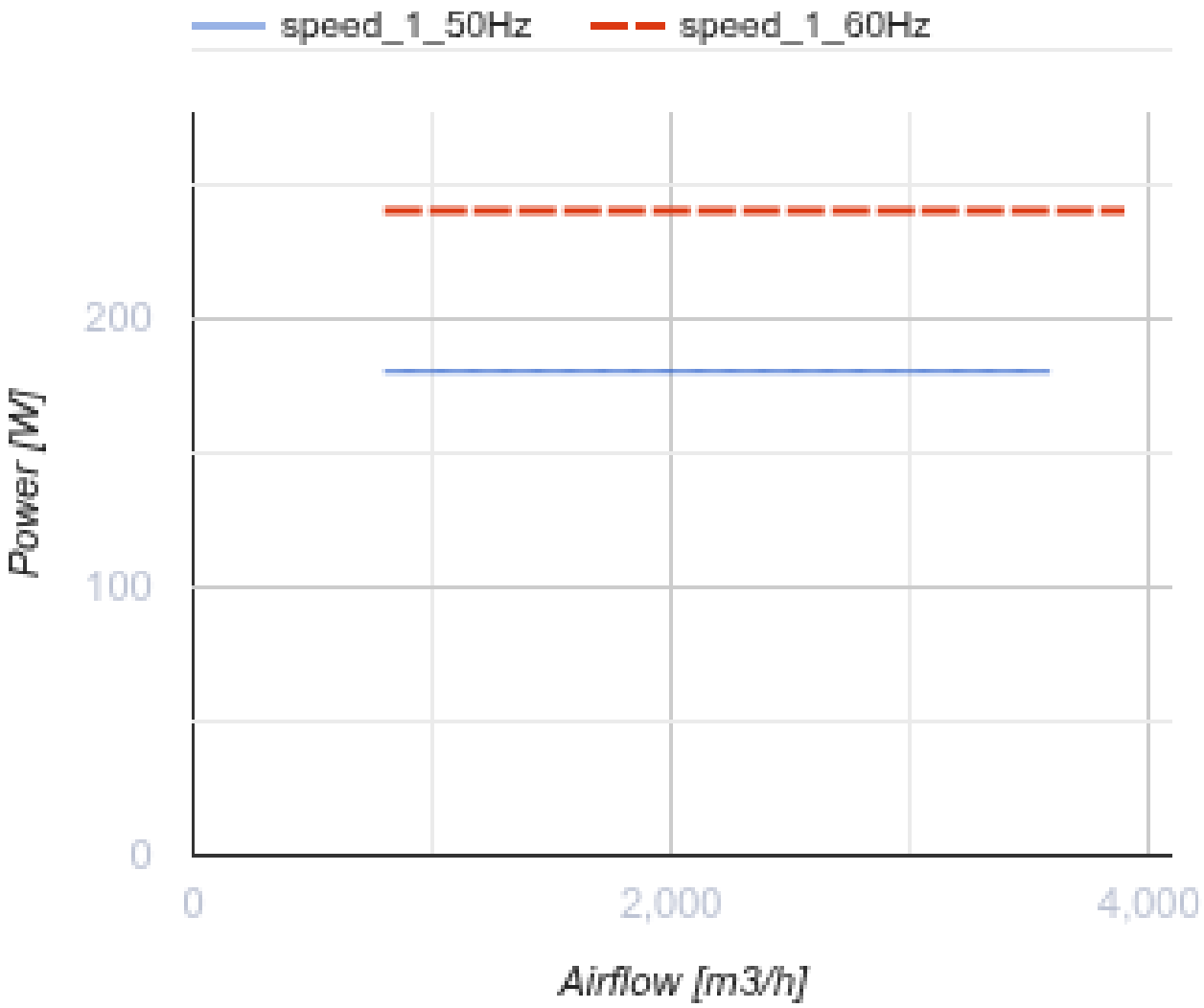

Dimensions

ØD	ØD1	ØD2	Ød	B	L
412	438	465	9.5	500	170

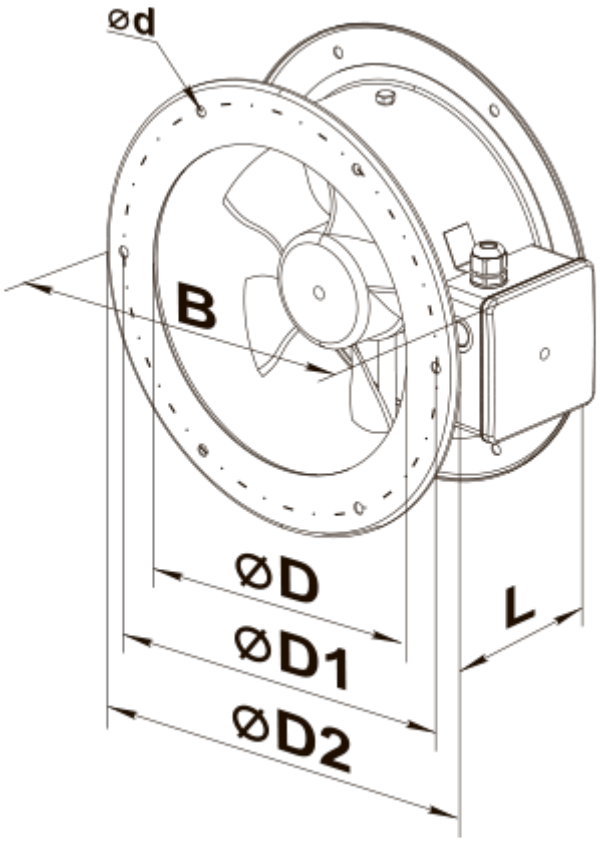
ød
B
ØD
ØD1
ØD2
L

Ecodesign

Trademark	Vents
Model	VKF 4E 400
Type of drive installed	External MSD or VSD
Type of heat recovery system	None
Nominal external pressure (Pa)	80
Maximum external leakage rates (%)	2.7
Static efficiency (%)	33.8
Declared typology	NRVU UVU
Effective electric power input (kW)	0.187
Sound power level (dB(A))	83