VKF 4E 550



Inline axial fans

- Sound pressure level LpA at 3 m: 62
- Impeller type: Axial
- Casing material: Coated steel
- Installation in any position

	Unit of measurement	VKF 4E 550
Connected air duct size	mm	550
Phases	-	1
Maximum supply voltage	V	240
Minimum supply voltage	V	220
Power supply frequency	Hz	50
Rated power	W	550
Unit current	A	2.55
Maximum airflow	m^3/h	8800
Rotation speed at 50hz	-	1300
Sound pressure level LpA at 3 m	dB(A)	62
Weight	kg	13.9
Transported air temperature (max)	°C	60
Transported air temperature (min)	°C	-30
Ingress protection rating	-	IPX4
Ingress protection rating of the drive	-	IP54
Impeller material	-	Coated steel

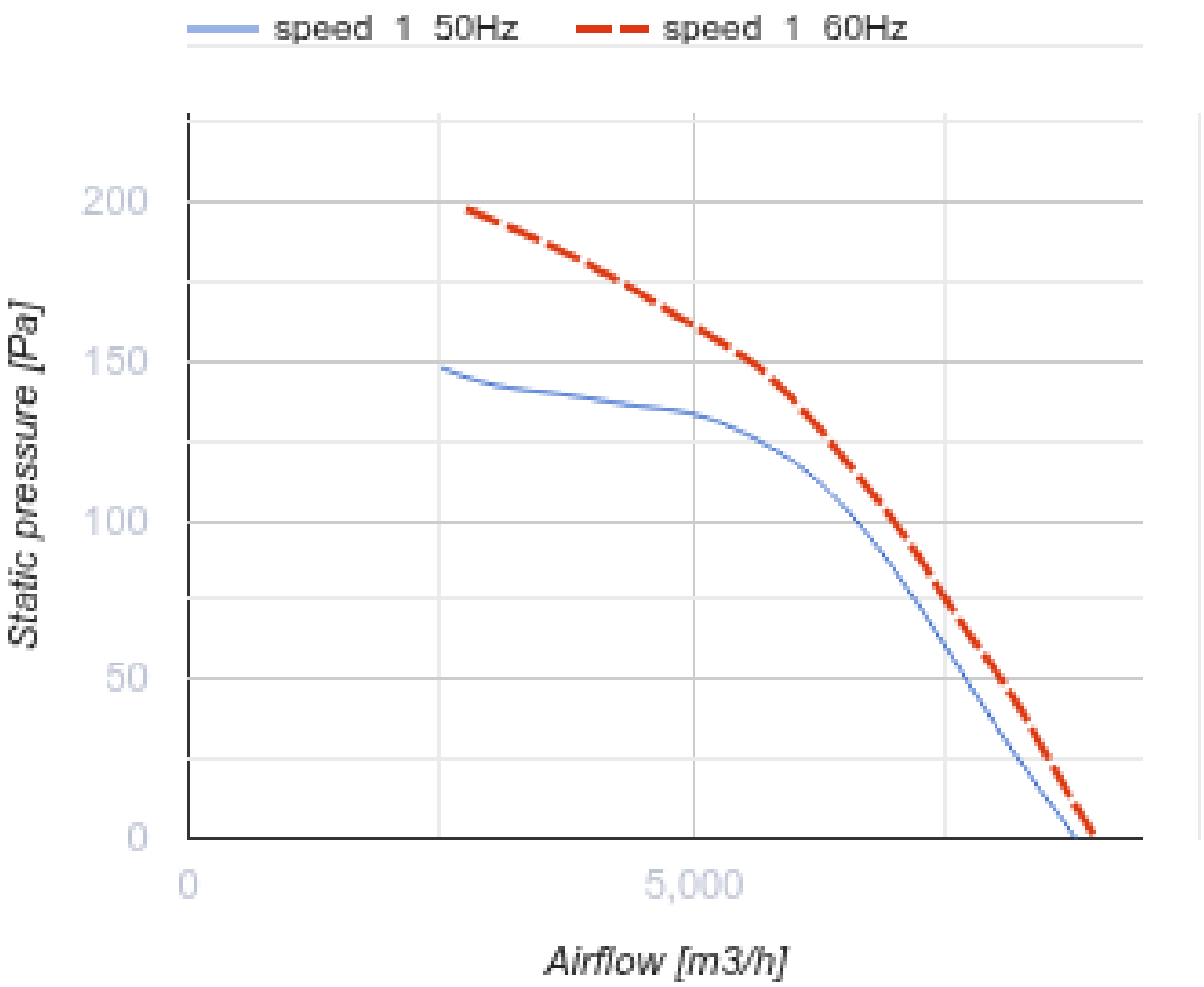
speed 1 50Hz
speed 1 60Hz
200
150
100
50
0
Static pressure [Pa]
0
5,000
Airflow [m3/h]

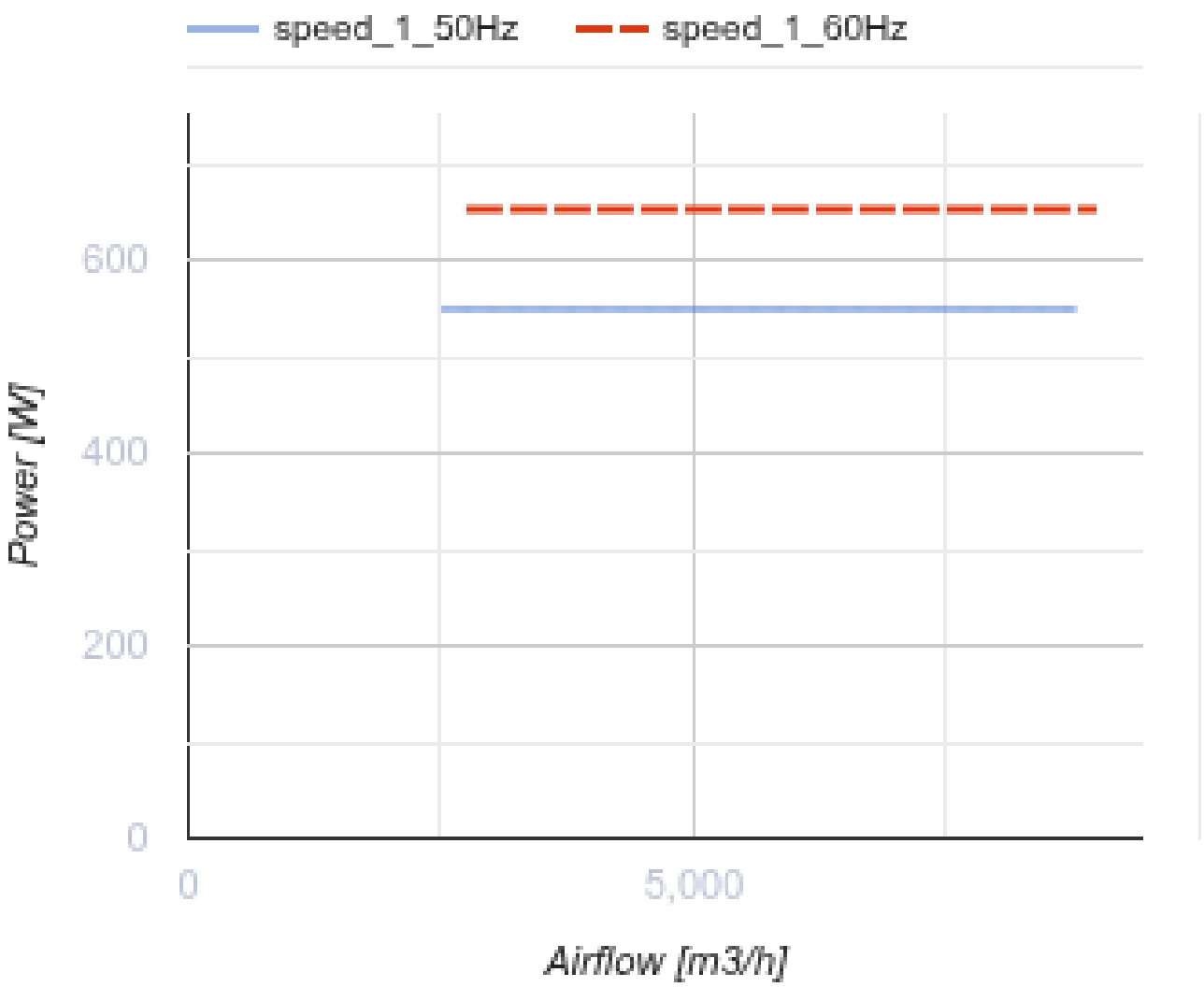

Dimensions

ØD	ØD1	ØD2	Ød	B	L
565	605	636	11.5	660	230

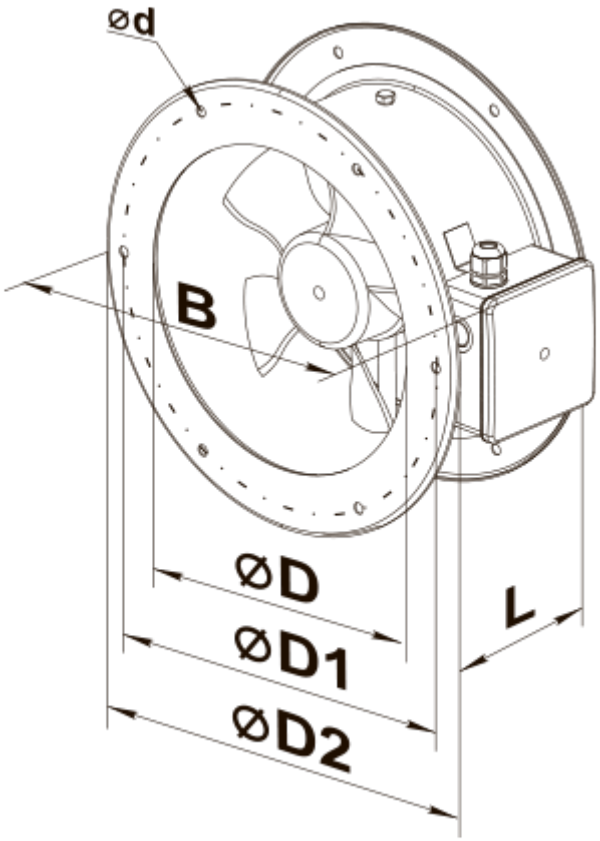
ød
B
ØD
ØD1
ØD2
L

Ecodesign

Trademark	Vents
Model	VKF 4E 550
Type of drive installed	External MSD or VSD
Type of heat recovery system	None
Nominal external pressure (Pa)	120
Maximum external leakage rates (%)	2.7
Static efficiency (%)	34.7
Effective electric power input (kW)	0.581
Sound power level (dB(A))	90
Declared typology	NRVU UVU