VKH 2E 310

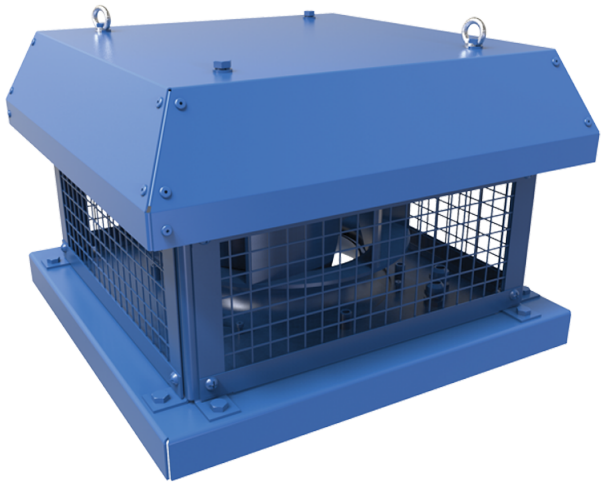

Roof centrifugal fans with horizontal air discharge

• Sound pressure level LpA at 3 m: 58
• Impeller type: Centrifugal impeller with backward curved blades
• Casing material: Coated steel

	Unit of measurement	VKH 2E 310
Phases	-	1
Minimum supply voltage	V	230
Maximum supply voltage	V	230
Power supply frequency	Hz	50
Rated power	W	324
Unit current	A	1.42
Maximum airflow	m³/h	2150
Rotation speed at 50hz	-	2620
Sound pressure level LpA at 3 m	dB(A)	58
Weight	kg	13.2
Transported air temperature (max)	°C	50
Transported air temperature (min)	°C	-25
Ingress protection rating	-	IPX4
Ingress protection rating of the drive	-	IP44
Impeller material	-	Aluminium
Size	mm	310

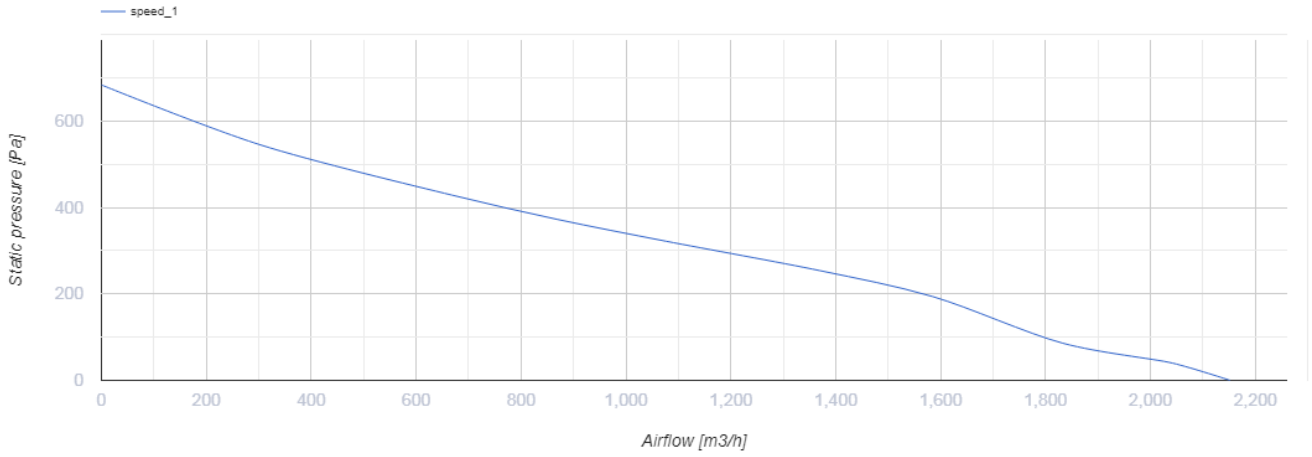

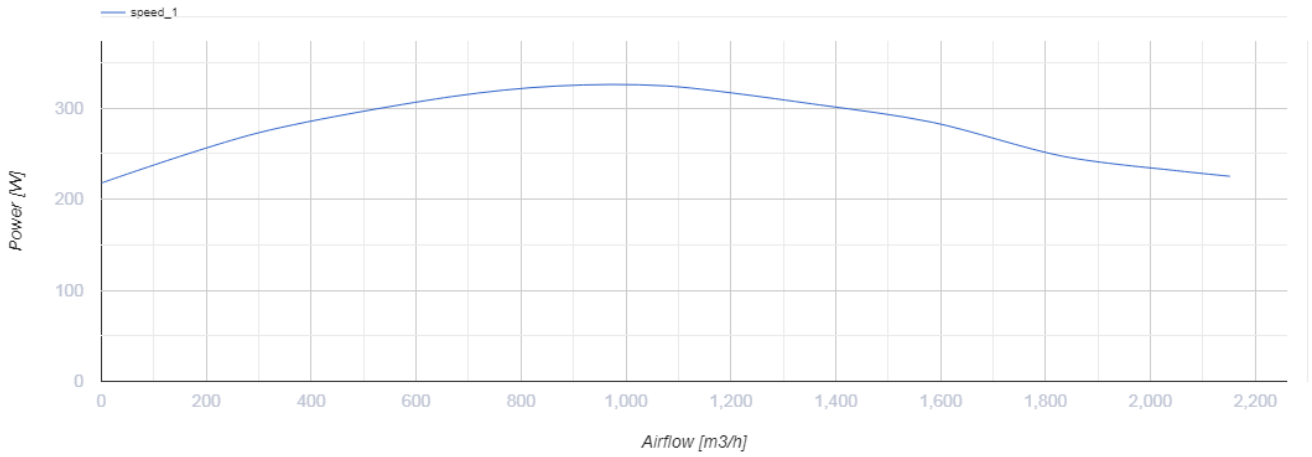

Dimensions

H	H1	A	B	C	Ød	ØD
251	258	451	450	330	11	291

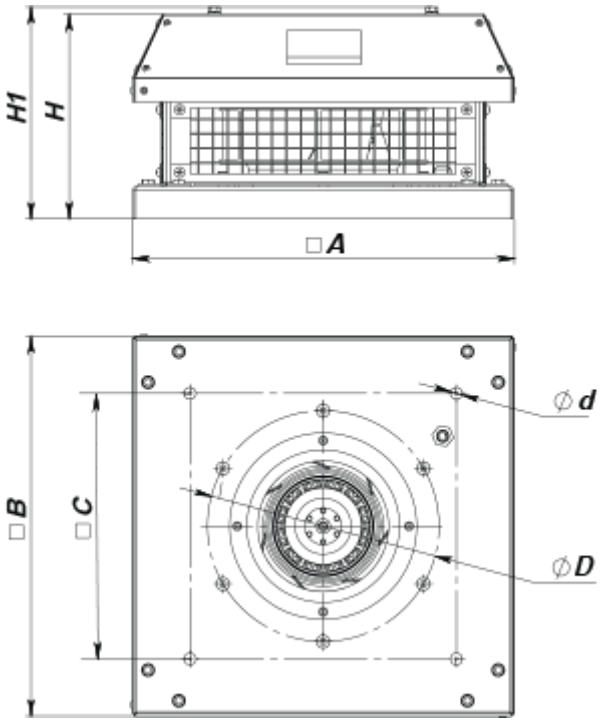

Accessories

Accessories for roof fans

Name	Photo	Description
RKV 250-315		Mounting frame
RKVI 250-315		Mounting frame with thermal-insulating layer
FKV 250-315		Mating flange
GKV 250-315		Flexible connector
KKV 250-315		Backdraft damper