VKH 4D 355

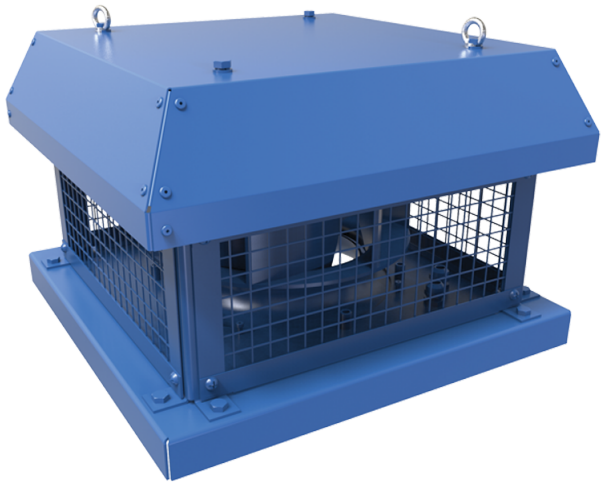

Roof centrifugal fans with horizontal air discharge

• Sound pressure level LpA at 3 m: 52
• Impeller type: Centrifugal impeller with backward curved blades
• Casing material: Coated steel

	Unit of measurement	VKH 4D 355
Phases	-	3
Maximum supply voltage	V	400
Minimum supply voltage	V	400
Power supply frequency	Hz	50/60
Rated power	W	264
Unit current	A	0.58
Maximum airflow	m³/h	3290
Rotation speed at 50hz	-	1430
Sound pressure level LpA at 3 m	dB(A)	52
Weight	kg	30.3
Transported air temperature (max)	°C	60
Transported air temperature (min)	°C	-30
Ingress protection rating	-	IPX4
Ingress protection rating of the drive	-	IP54
Impeller material	-	Aluminium
Size	mm	355

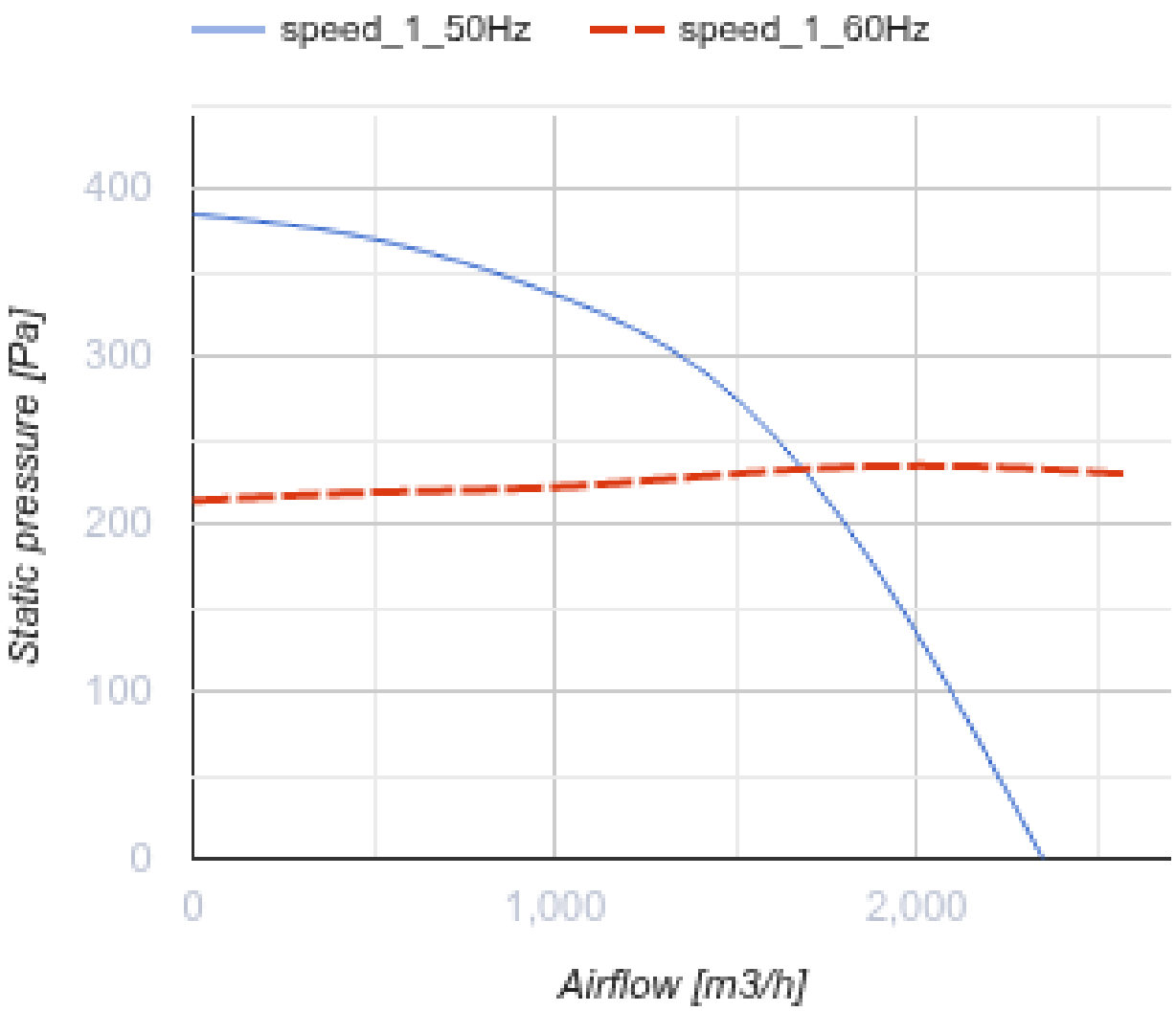
speed_1_50Hz
speed_1_60Hz
400
300
200
100
0
Static pressure [Pa]
0
1,000
2,000
Airflow [m3/h]

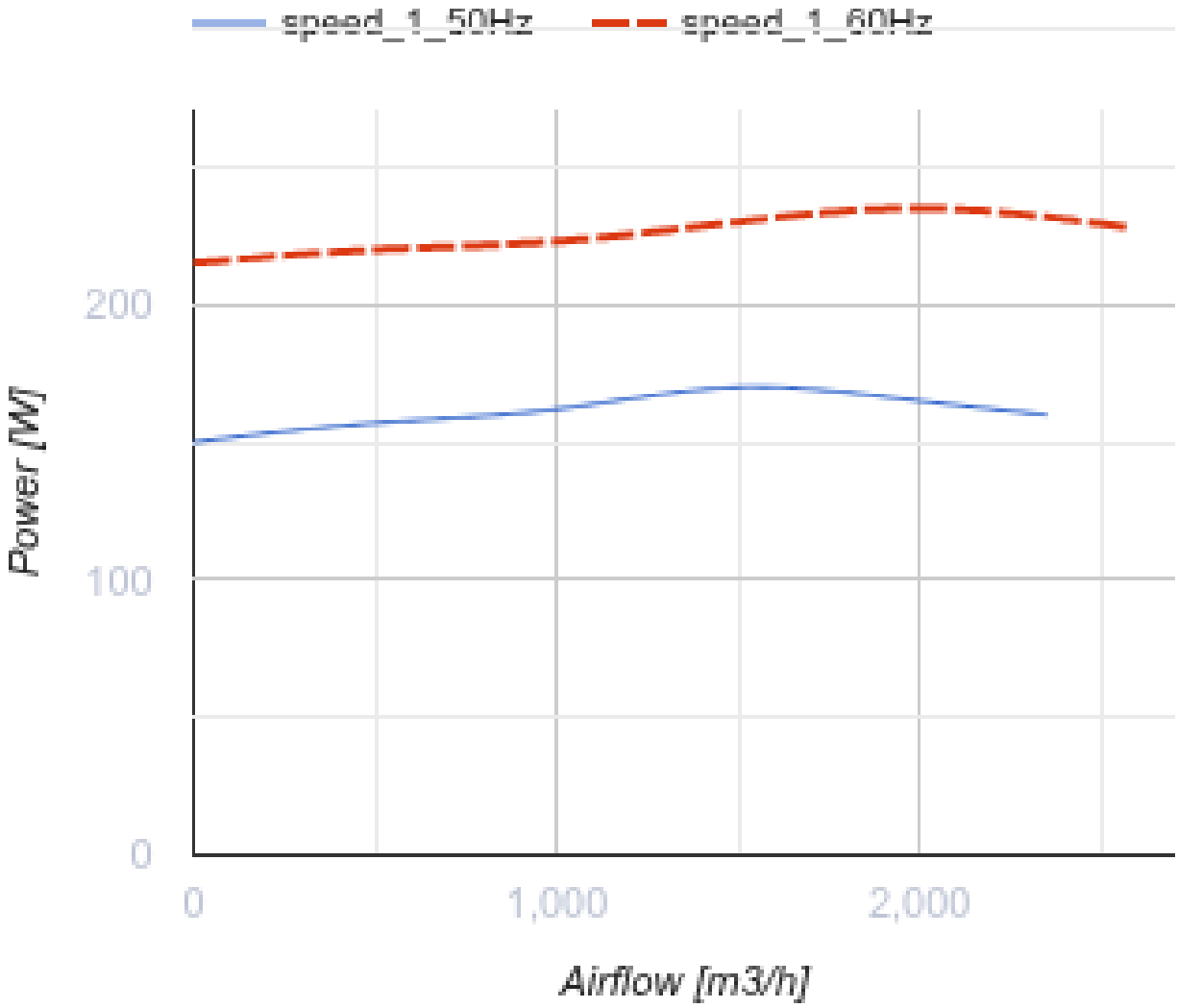

Dimensions

H	H1	A	B	C	Ød	ØD
347	386	625	620	450	11	438

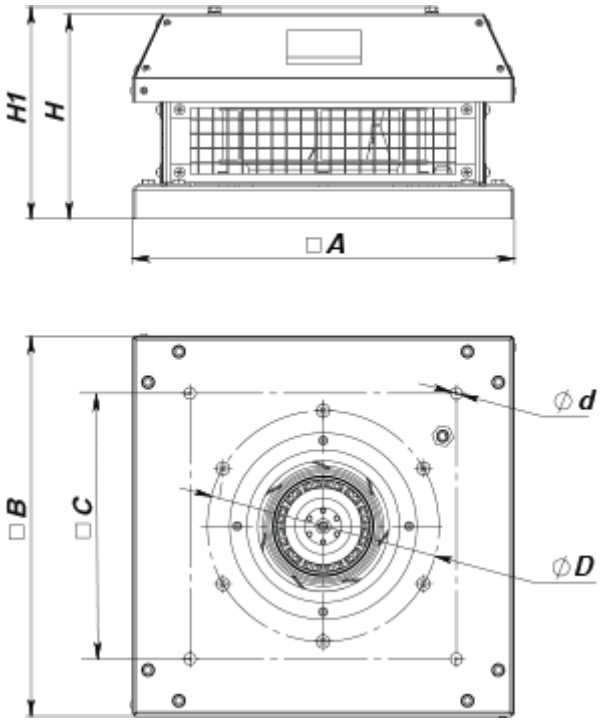

Accessories

Transformer speed controllers

Name	Photo	Description
RSA5D-1,5-M		Three phase speed controller

Accessories for roof fans

Name	Photo	Description
RKV 355-400		Mounting frame
RKVI 355-400		Mounting frame with thermal-insulating layer
FKV 355-500		Mating flange
GKV 355-500		Flexible connector
KKV 355-500		Backdraft damper

Ecodesign

Trademark	Vents
Model	VKH 4D 355
Type of drive installed	External MSD or VSD
Type of heat recovery system	None
Nominal external pressure (Pa)	220
Maximum external leakage rates (%)	2.7
Static efficiency (%)	47.1
Effective electric power input (kW)	0.228
Sound power level (dB(A))	73
Declared typology	NRVU UVU