VKH 6D 500

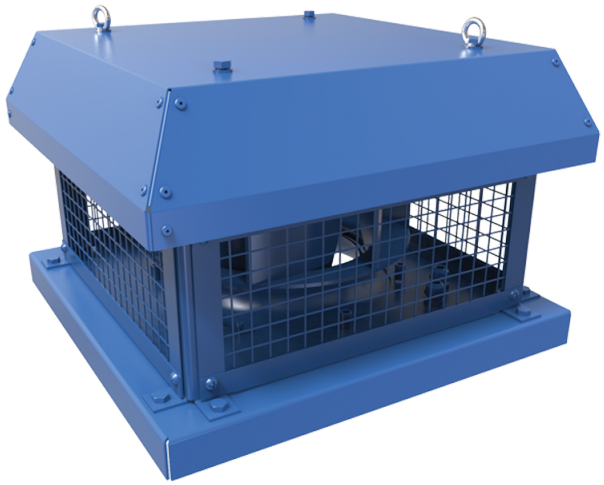

Roof centrifugal fans with horizontal air discharge

• Sound pressure level LpA at 3 m: 52
• Impeller type: Centrifugal impeller with backward curved blades
• Casing material: Coated steel

	Unit of measurement	VKH 6D 500
Phases	-	3
Minimum supply voltage	V	400
Maximum supply voltage	V	400
Power supply frequency	Hz	50/60
Rated power	W	440
Unit current	A	1.23
Maximum airflow	m³/h	6000
Rotation speed at 50hz	-	978
Sound pressure level LpA at 3 m	dB(A)	52
Weight	kg	52.7
Transported air temperature (max)	°C	60
Transported air temperature (min)	°C	-25
Ingress protection rating	-	IPX4
Ingress protection rating of the drive	-	IP54
Impeller material	-	Aluminium
Size	mm	500

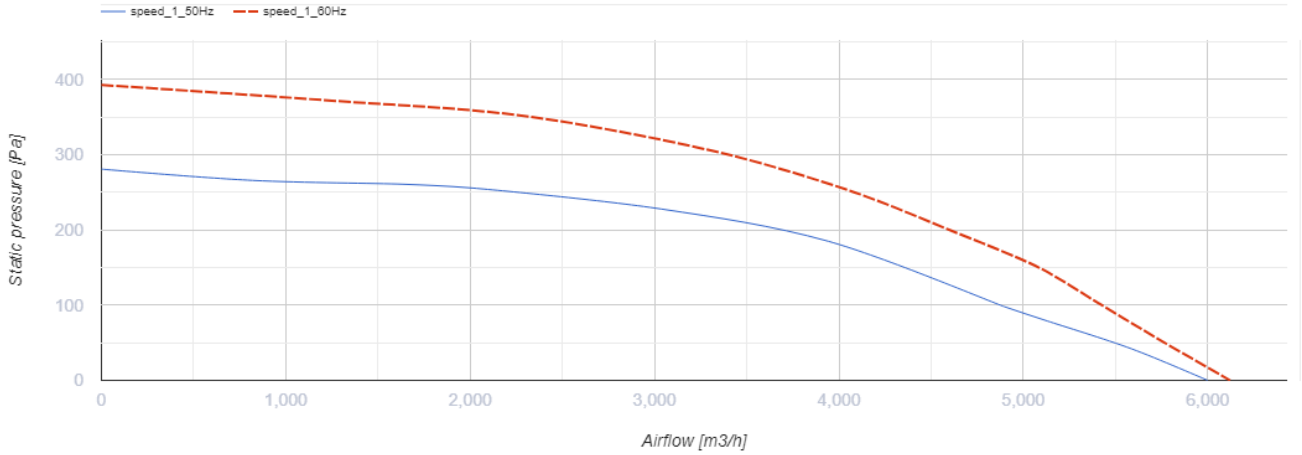

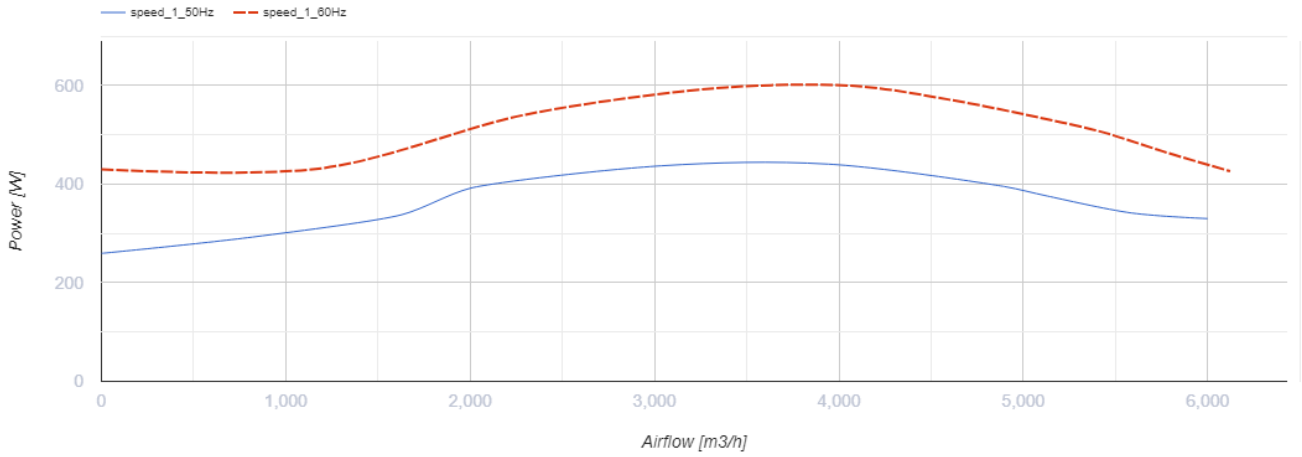

Dimensions

H	H1	A	B	C	Ød	ØD
461	501	710	700	535	11	438

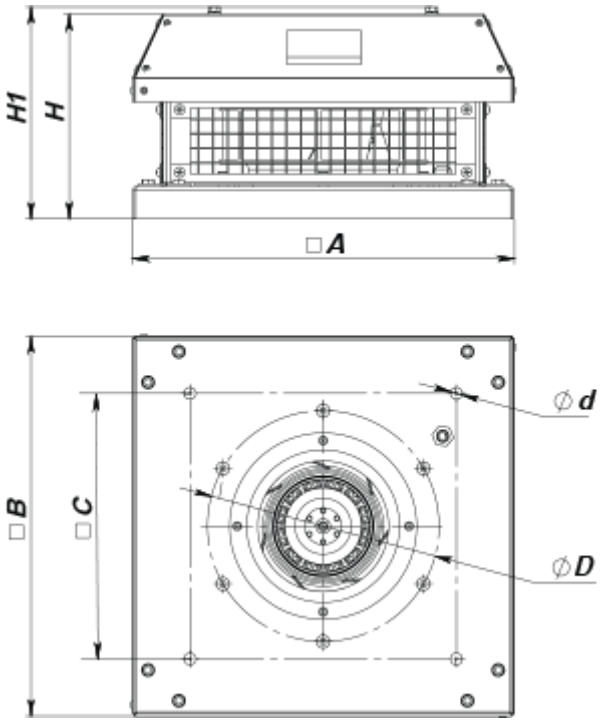

Accessories

Transformer speed controllers

Name	Photo	Description
RSA5D-1,5-M		Three phase speed controller

Accessories for roof fans

Name	Photo	Description
RKV 450-500		Mounting frame
RKVI 450-500		Mounting frame with thermal-insulating layer
FKV 355-500		Mating flange
GKV 355-500		Flexible connector
KKV 355-500		Backdraft damper