VKH 6E 560

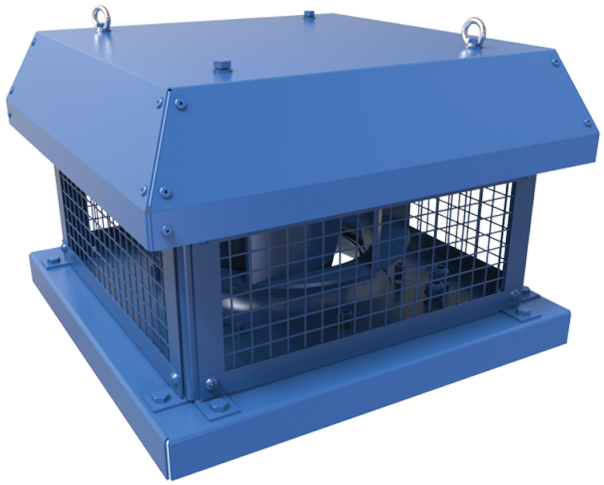

Roof centrifugal fans with horizontal air discharge

• Sound pressure level LpA at 3 m: 58
• Impeller type: Centrifugal impeller with backward curved blades
• Casing material: Coated steel

	Unit of measurement	VKH 6E 560
Phases	-	1
Minimum supply voltage	V	230
Maximum supply voltage	V	230
Power supply frequency	Hz	50
Rated power	W	613
Unit current	A	2.7
Maximum airflow	m³/h	9560
Rotation speed at 50hz	-	930
Sound pressure level LpA at 3 m	dB(A)	58
Weight	kg	76.4
Transported air temperature (max)	°C	50
Transported air temperature (min)	°C	-25
Ingress protection rating	-	IPX4
Ingress protection rating of the drive	-	IP54
Impeller material	-	Aluminium
Size	mm	560

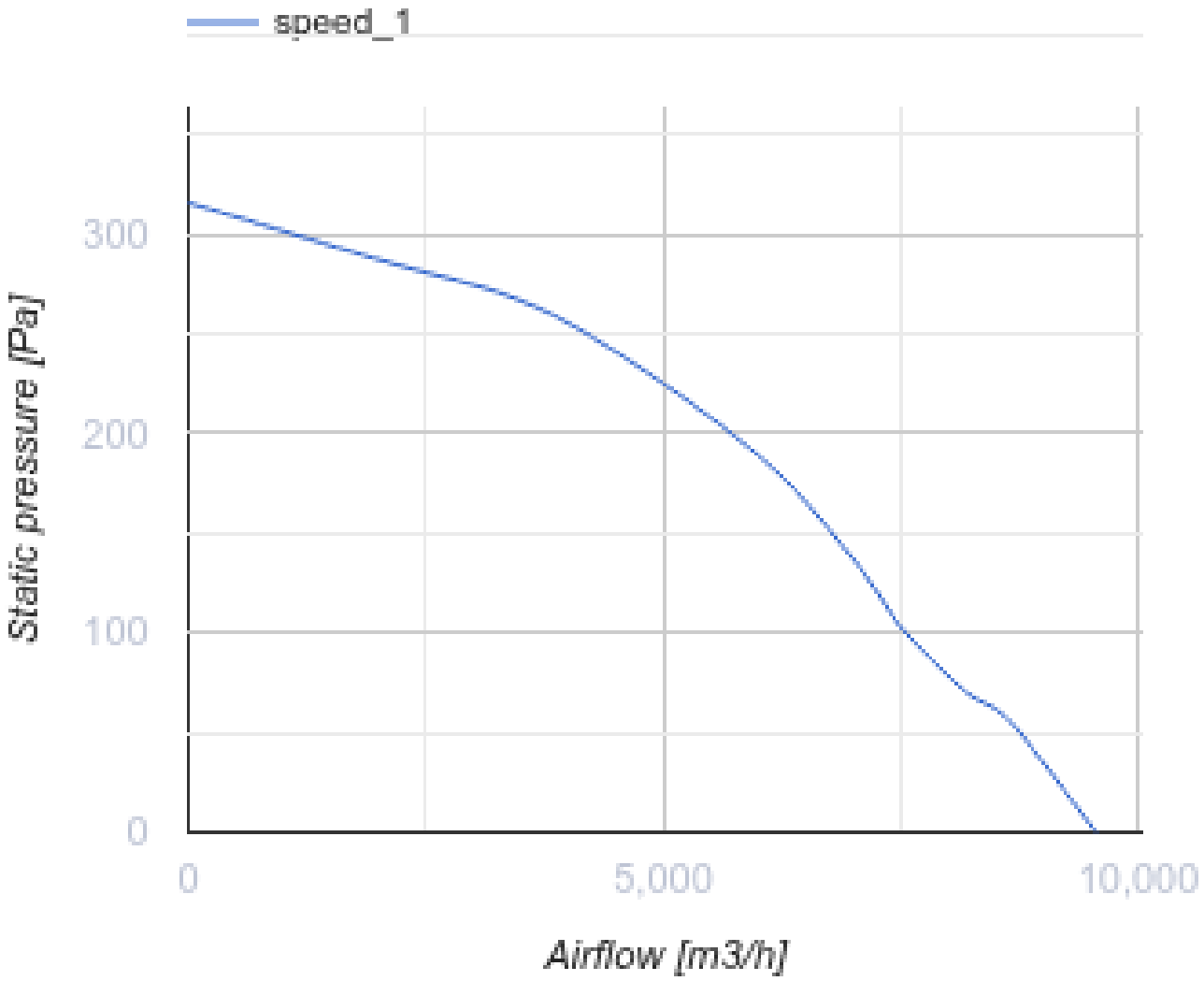
speed_1
300
200
100
0
Static pressure [Pa]
0
5,000
10,000
Airflow [m3/h]

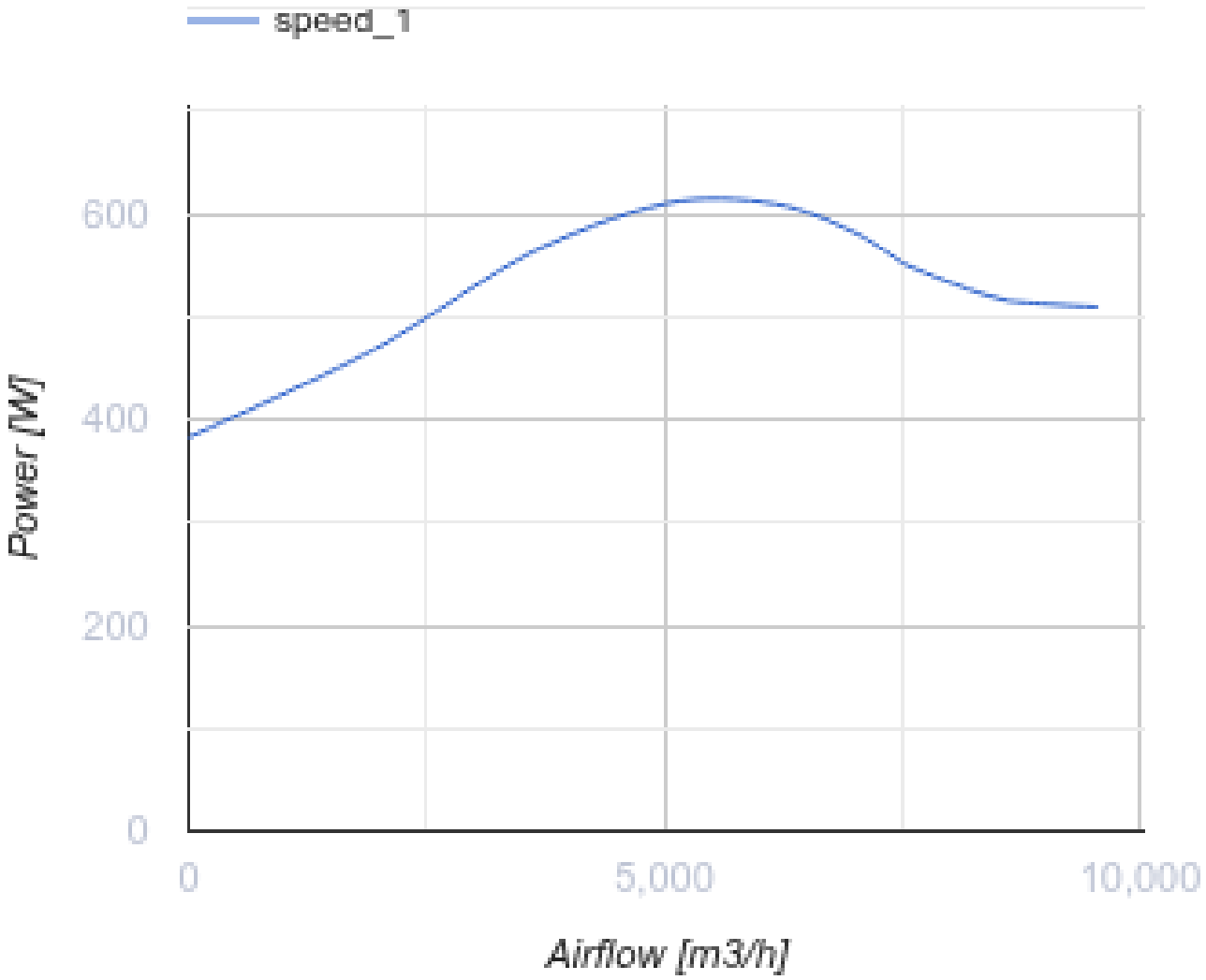

Dimensions

H	H1	A	B	C	Ød	ØD
489	528	900	895	750	11	605

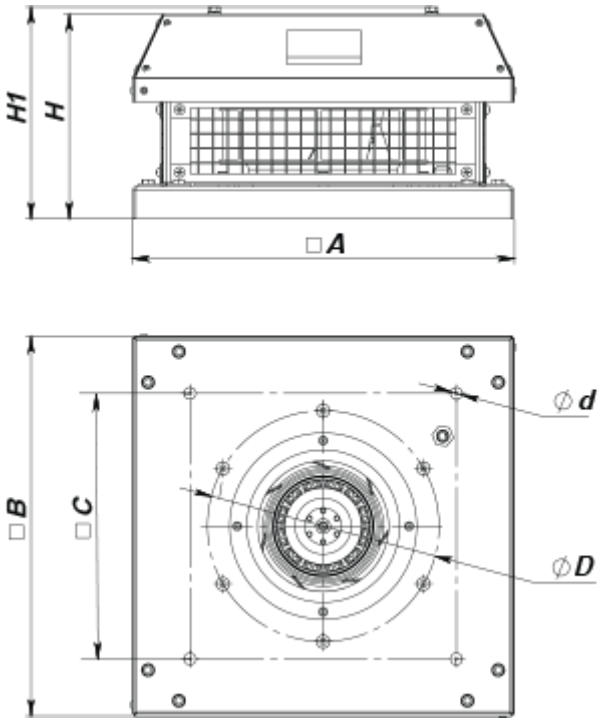

Accessories

Transformer speed controllers

Name	Photo	Description
RSA5E-3,5-T		Speed controllers are applied for air flow control of single phase fans by means of motor step speed control

Accessories for roof fans

Name	Photo	Description
RKV 560		Mounting frame
RKVI 560		Mounting frame with thermal-insulating layer
FKV 560		Mating flange
GKV 560		Flexible connector
KKV 560		Backdraft damper