VKHC 225 EC

Roof centrifugal fans with EC-motors

• Sound pressure level LpA at 3 m: 47
• Impeller type: Centrifugal impeller with backward curved blades
• Casing material: Coated steel

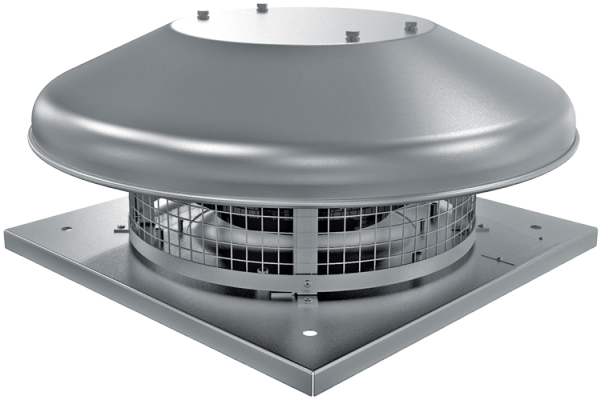

	Unit of measurement	VKHC 225 EC
Phases	-	1
Minimum supply voltage	V	230
Maximum supply voltage	V	230
Power supply frequency	Hz	50/60
Rated power	W	95
Unit current	A	0.8
Maximum airflow	m³/h	1350
Sound pressure level LpA at 3 m	dB(A)	47
Weight	kg	7
Transported air temperature (max)	°C	60
Transported air temperature (min)	°C	-25
Ingress protection rating	-	IPX4
Ingress protection rating of the drive	-	IP55
Size	mm	225

Dimensions

H	ØD	ØD1	L	L1
193	503	210	330	245

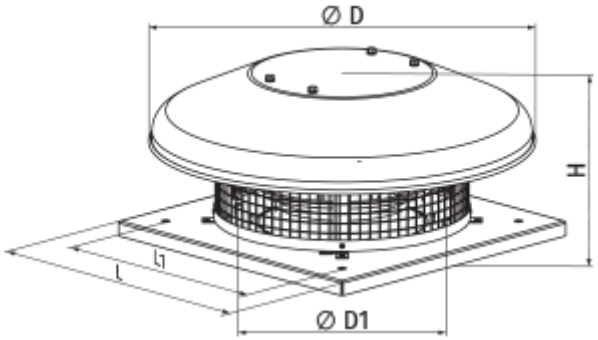

Accessories

Speed controllers for EC motors

Name	Photo	Description
R-1/010		Speed controller for EC motors

Accessories for roof fans

Name	Photo	Description
RKV 220-225		Mounting frame
RKVI 220-225		Mounting frame with thermal-insulating layer
FKV 220-225		Mating flange
GKV 220-225		Flexible connector
KKV 220-225		Backdraft damper

Ecodesign

Trademark	Vents
Model	VKHC 225 EC
Type of drive installed	Integrated VSD
Type of heat recovery system	None
Nominal external pressure (Pa)	256
Maximum external leakage rates (%)	2.7
Static efficiency (%)	50.6
Declared typology	NRVU UVU
Effective electric power input (kW)	0.094
Sound power level (dB(A))	60