# VKHC 2E 190

Roof centrifugal fans

• Sound pressure level LpA at 3 m: 48
• Impeller type: Centrifugal impeller with backward curved blades
• Casing material: Coated steel

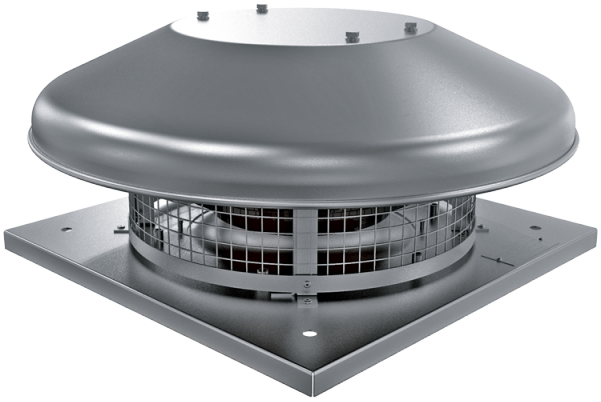

| | Unit of measurement | VKHC 2E 190 | |
|---|---|---|---|
| Phases | - | 1 | |
| Minimum supply voltage | V | 230 | |
| Maximum supply voltage | V | 230 | |
| Power supply frequency | Hz | 50 | 60 |
| Rated power | W | 64 | |
| Unit current | A | 0.29 | |
| Maximum airflow | m³/h | 670 | |
| Rotation speed at 50hz | - | 2730 | |
| Sound pressure level LpA at 3 m | dB(A) | 48 | |
| Weight | kg | 6 | |
| Transported air temperature (max) | °C | 50 | |
| Transported air temperature (min) | °C | -25 | |
| Ingress protection rating | - | IPX4 | |
| Ingress protection rating of the drive | - | IP44 | |
| Size | mm | 190 | |

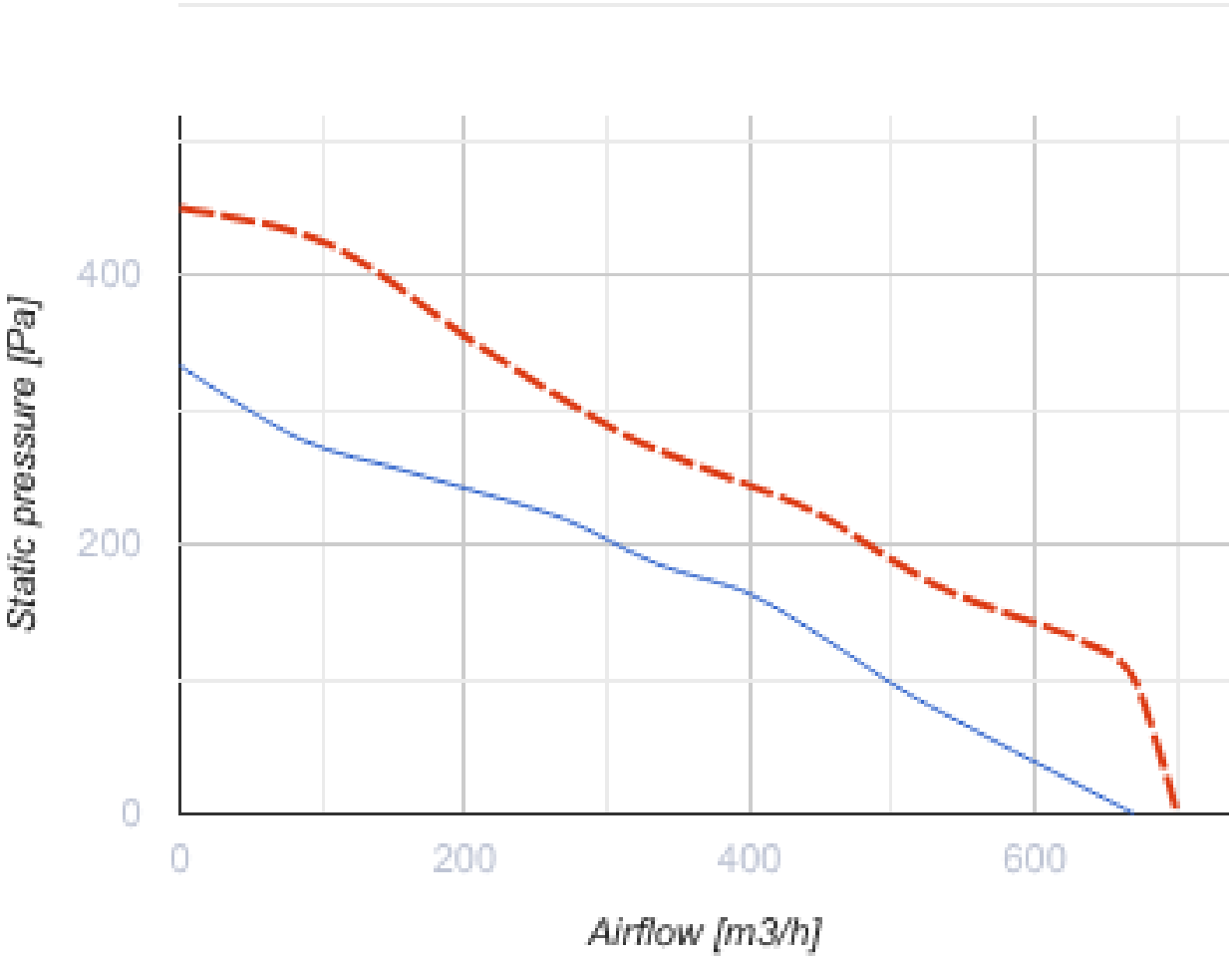
Static pressure [Pa]
400
200
0
0
200
400
600
Airflow [m3/h]

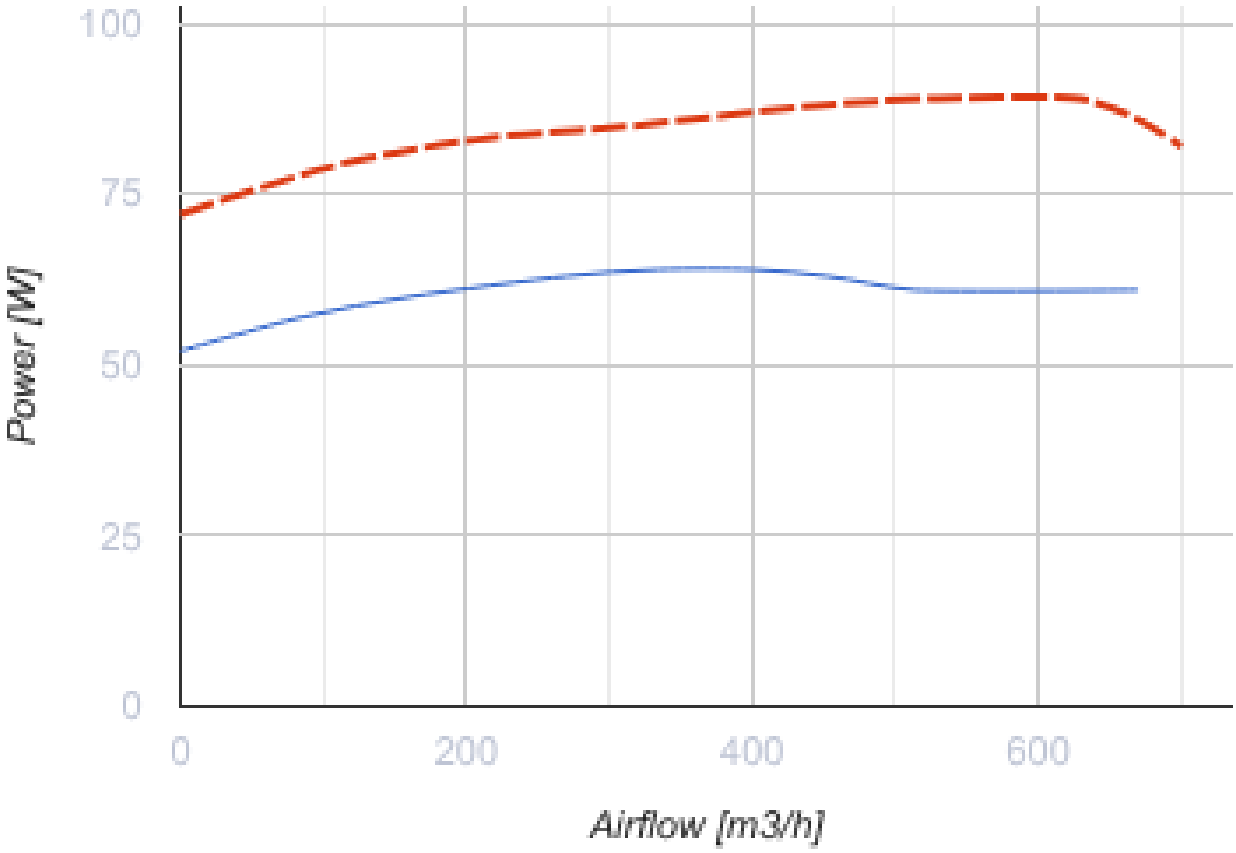


## Dimensions

| H | ØD | ØD1 | L | L1 |
|---|---|---|---|---|
| 178 | 503 | 210 | 330 | 245 |

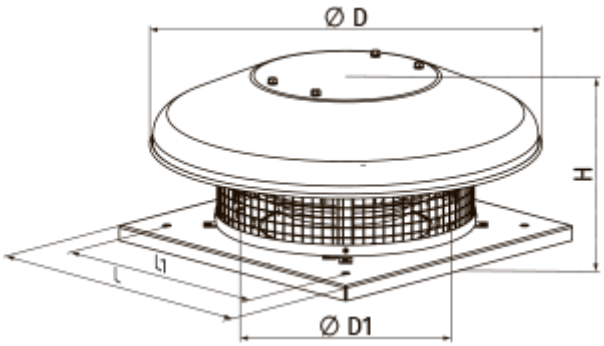


## Accessories

**Thyristor speed controllers**

| Name | Photo | Description |
|---|---|---|
| RS-3,0-T |  | Applied in ventilation systems for speed switching ON/OFF and speed control of single-phase power-controlled motors |
| RS-5,0-T |  | Applied in ventilation systems for speed switching ON/OFF and speed control of single-phase power-controlled motors |
| RS-10,0-T |  | Applied in ventilation systems for speed switching ON/OFF and speed control of single-phase power-controlled motors |

### Transformer speed controllers

| Name | Photo | Description |
|---|---|---|
| RSA5E-3,5-T |  | Speed controllers are applied for air flow control of single phase fans by means of motor step speed control |
| RSA5E-5,0-T |  | Speed controllers are applied for air flow control of single phase fans by means of motor step speed control |
| RSA5E-7,5-T |  | Speed controllers are applied for air flow control of single phase fans by means of motor step speed control |
| RSA5D-1,5-M |  | Three phase speed controller |
| RSA5D-6,0-M |  | Three phase speed controller |
| RSA5D-8,0-M |  | Three phase speed controller |
| RSA5D-11,0-M |  | Three phase speed controller |
| RSA5E-1,5-T |  | Speed controllers are applied for air flow control of single phase fans by means of motor step speed control |

### Accessories for roof fans

| Name | Photo | Description |
|---|---|---|
| RKV 220-225 |  | Mounting frame |

| | | |
|---|---|---|
| RKVI 220-225 |  | Mounting frame with thermal-insulating layer |
| FKV 220-225 |  | Mating flange |
| GKV 220-225 |  | Flexible connector |
| KKV 220-225 |  | Backdraft damper |

## Ecodesign

| Trademark | Vents |
|---|---|
| Model | VKHC 2E 190 |
| Type of drive installed | Integrated VSD |
| Type of heat recovery system | None |
| Nominal external pressure (Pa) | 163 |
| Maximum external leakage rates (%) | 2.7 |
| Static efficiency (%) | 33.9 |
| Declared typology | NRVU UVU |
| Effective electric power input (kW) | 0.064 |
| Sound power level (dB(A)) | 64 |