VKHC 2E 220

Roof centrifugal fans

• Sound pressure level LpA at 3 m: 50
• Impeller type: Centrifugal impeller with backward curved blades
• Casing material: Coated steel

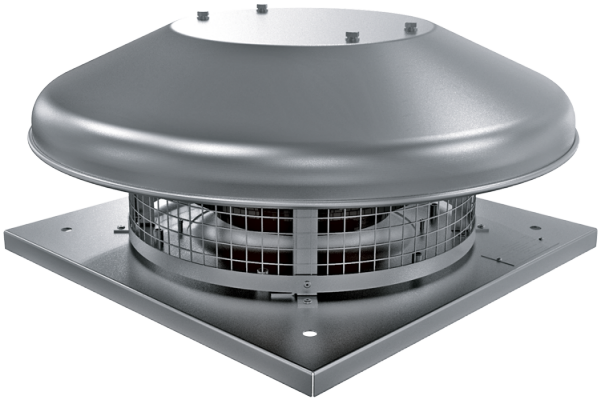

	Unit of measurement	VKHC 2E 220	
Phases	-	1	
Minimum supply voltage	V	230	
Maximum supply voltage	V	230	
Power supply frequency	Hz	50	60
Rated power	W	108	
Unit current	A	0.49	
Maximum airflow	m³/h	915	
Rotation speed at 50hz	-	2640	
Sound pressure level LpA at 3 m	dB(A)	50	
Weight	kg	7	
Transported air temperature (max)	°C	50	
Transported air temperature (min)	°C	-25	
Ingress protection rating	-	IPX4	
Ingress protection rating of the drive	-	IP44	
Size	mm	220	

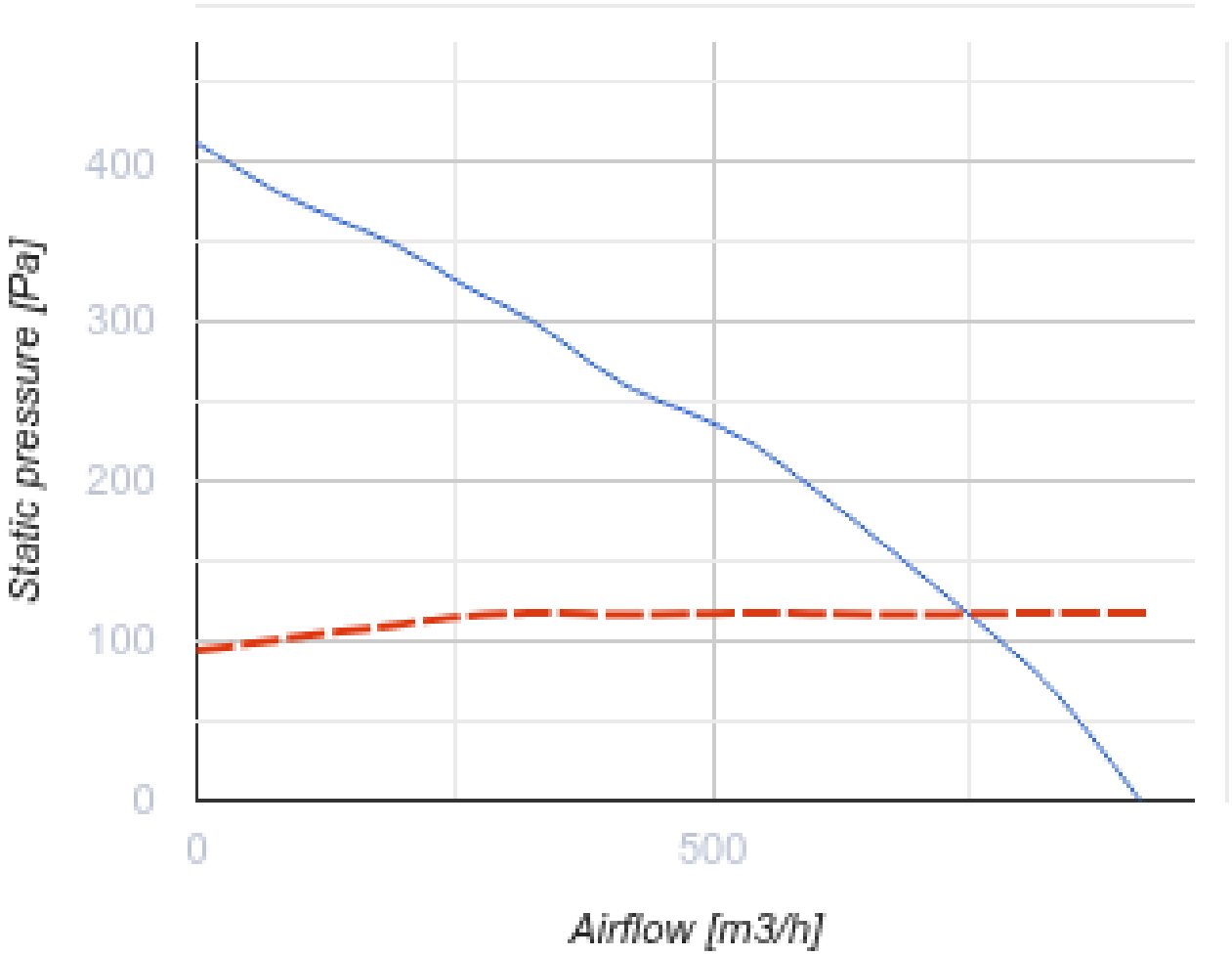
400
300
200
100
0
Static pressure [Pa]
0
500
Airflow [m3/h]

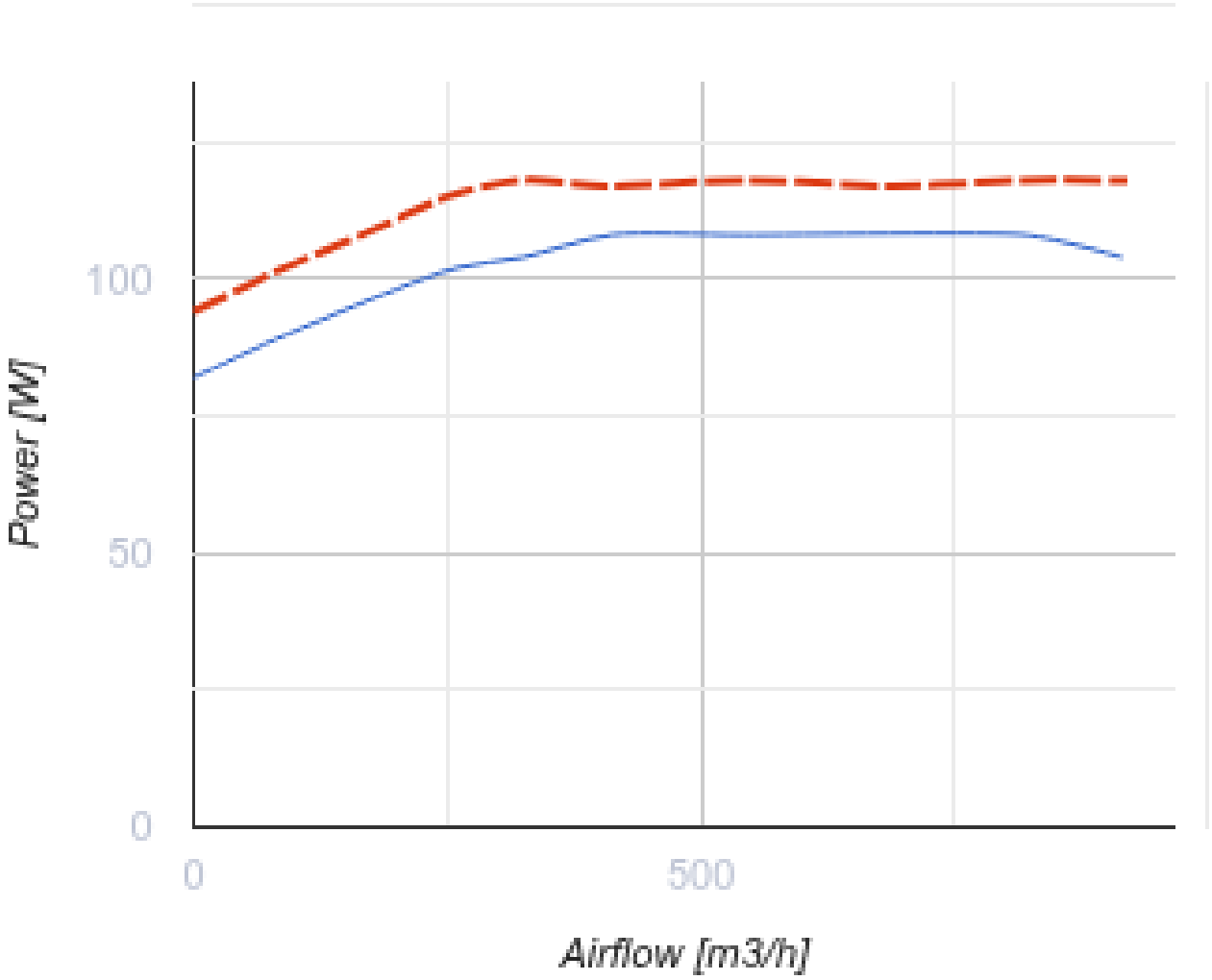

Dimensions

H	ØD	ØD1	L	L1
186	503	210	330	245

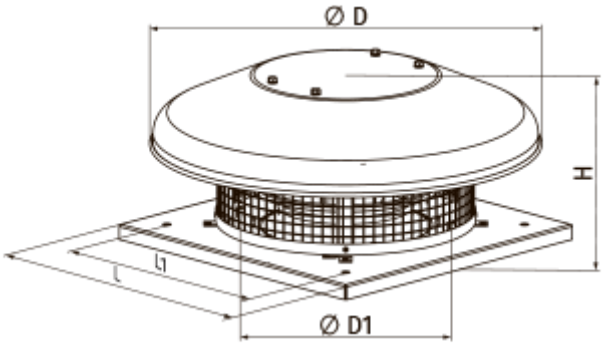

Accessories

Thyristor speed controllers

Name	Photo	Description
RS-3,0-T		Applied in ventilation systems for speed switching ON/OFF and speed control of single-phase power-controlled motors
RS-5,0-T		Applied in ventilation systems for speed switching ON/OFF and speed control of single-phase power-controlled motors
RS-10,0-T		Applied in ventilation systems for speed switching ON/OFF and speed control of single-phase power-controlled motors

Transformer speed controllers

Name	Photo	Description
RSA5E-3,5-T		Speed controllers are applied for air flow control of single phase fans by means of motor step speed control
RSA5E-5,0-T		Speed controllers are applied for air flow control of single phase fans by means of motor step speed control
RSA5E-7,5-T		Speed controllers are applied for air flow control of single phase fans by means of motor step speed control
RSA5D-1,5-M		Three phase speed controller
RSA5D-6,0-M		Three phase speed controller
RSA5D-8,0-M		Three phase speed controller
RSA5D-11,0-M		Three phase speed controller
RSA5E-1,5-T		Speed controllers are applied for air flow control of single phase fans by means of motor step speed control

Accessories for roof fans

Name	Photo	Description

RKV 220-225		Mounting frame
RKVI 220-225		Mounting frame with thermal-insulating layer
FKV 220-225		Mating flange
GKV 220-225		Flexible connector
KKV 220-225		Backdraft damper

Ecodesign

Trademark	Vents
Model	VKHC 2E 220
Type of drive installed	Integrated VSD
Type of heat recovery system	None
Nominal external pressure (Pa)	222
Maximum external leakage rates (%)	2.7
Static efficiency (%)	36.5
Declared typology	NRVU UVU
Effective electric power input (kW)	0.108
Sound power level (dB(A))	59