VKHC 4D 310

Roof centrifugal fans

• Sound pressure level LpA at 3 m: 47
• Impeller type: Centrifugal impeller with backward curved blades
• Casing material: Coated steel

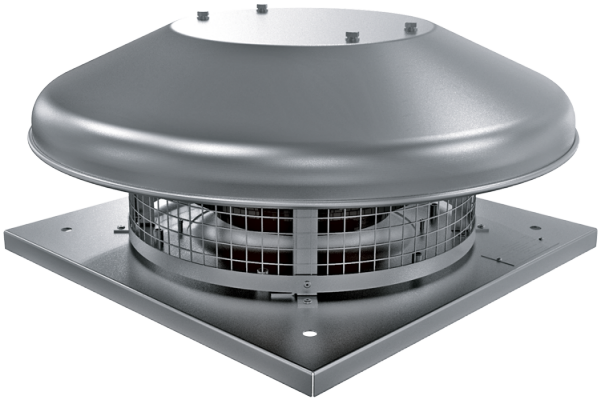

	Unit of measurement	VKHC 4D 310	
Phases	-	3	
Maximum supply voltage	V	400	
Minimum supply voltage	V	400	
Power supply frequency	Hz	50	60
Rated power	W	155	
Unit current	A	0.29	
Maximum airflow	m³/h	2300	
Rotation speed at 50hz	-	1410	
Sound pressure level LpA at 3 m	dB(A)	47	
Weight	kg	11	
Transported air temperature (max)	°C	50	
Transported air temperature (min)	°C	-25	
Ingress protection rating	-	IPX4	
Ingress protection rating of the drive	-	IP44	
Size	mm	310	

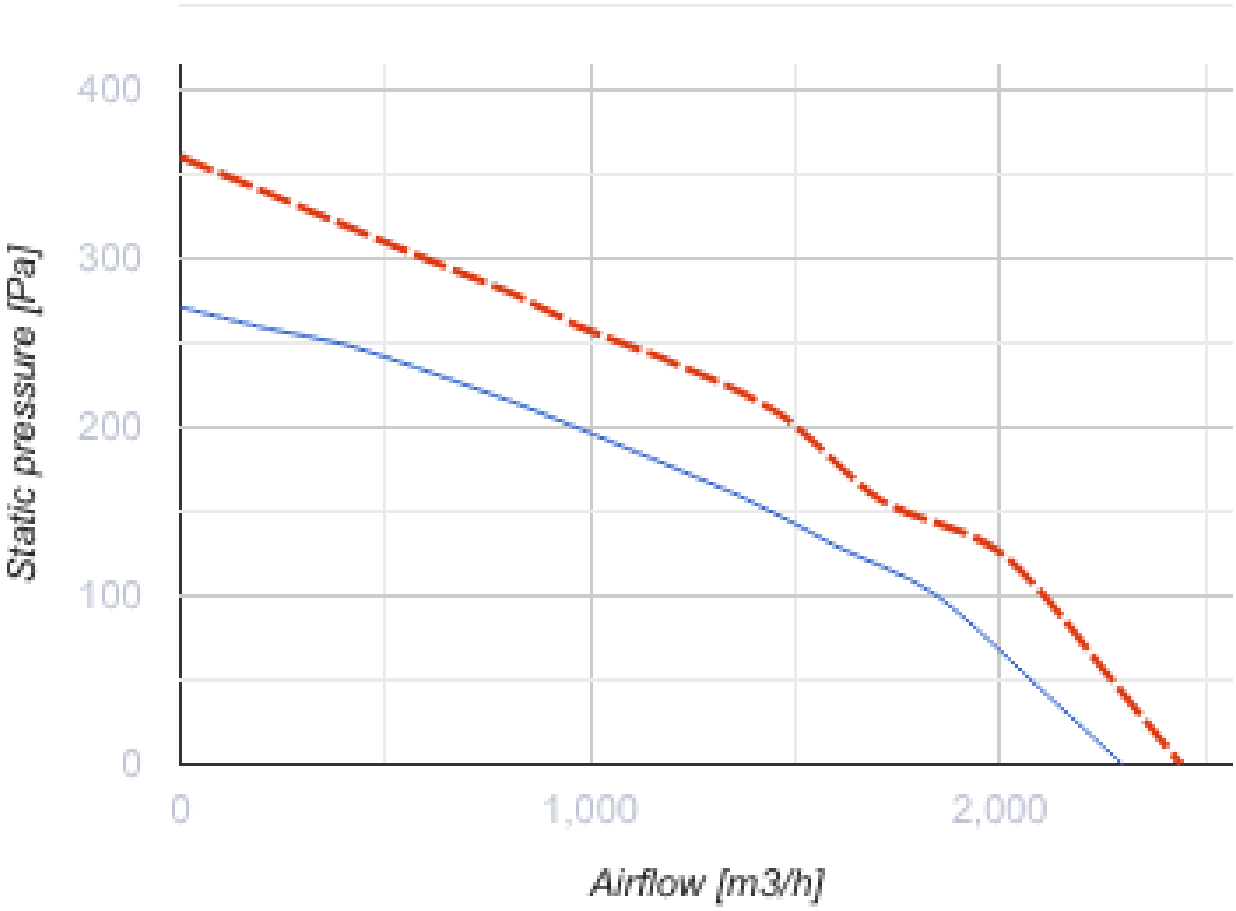
400
300
200
100
0
Static pressure [Pa]
0
1,000
2,000
Airflow [m3/h]

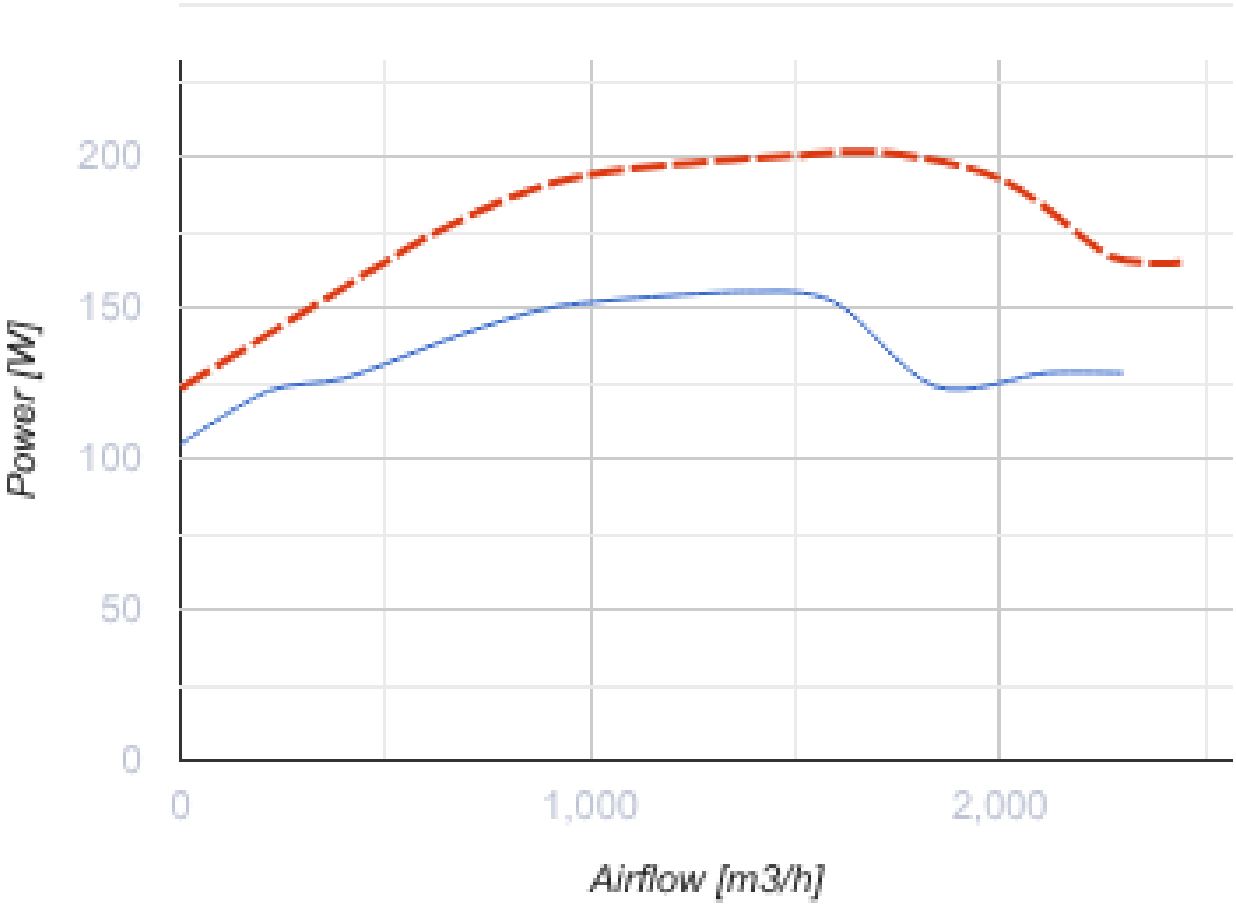

Dimensions

H	ØD	ØD1	L	L1
277	623	285	420	330

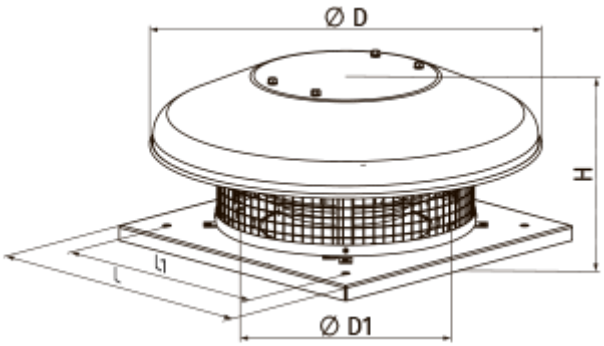

Accessories

Thyristor speed controllers

Name	Photo	Description
RS-3,0-T		Applied in ventilation systems for speed switching ON/OFF and speed control of single-phase power-controlled motors
RS-5,0-T		Applied in ventilation systems for speed switching ON/OFF and speed control of single-phase power-controlled motors
RS-10,0-T		Applied in ventilation systems for speed switching ON/OFF and speed control of single-phase power-controlled motors

Transformer speed controllers

Name	Photo	Description
RSA5E-3,5-T		Speed controllers are applied for air flow control of single phase fans by means of motor step speed control
RSA5E-5,0-T		Speed controllers are applied for air flow control of single phase fans by means of motor step speed control
RSA5E-7,5-T		Speed controllers are applied for air flow control of single phase fans by means of motor step speed control
RSA5D-1,5-M		Three phase speed controller
RSA5D-6,0-M		Three phase speed controller
RSA5D-8,0-M		Three phase speed controller
RSA5D-11,0-M		Three phase speed controller
RSA5E-1,5-T		Speed controllers are applied for air flow control of single phase fans by means of motor step speed control

Accessories for roof fans

Name	Photo	Description
RKV 250-315		Mounting frame

RKVI 250-315		Mounting frame with thermal-insulating layer
FKV 250-315		Mating flange
GKV 250-315		Flexible connector
KKV 250-315		Backdraft damper

Ecodesign

Trademark	Vents
Model	VKHC 4D 310
Type of drive installed	External MSD or VSD
Type of heat recovery system	None
Nominal external pressure (Pa)	101
Maximum external leakage rates (%)	2.7
Static efficiency (%)	50.6
Declared typology	NRVU UVU
Sound power level (dB(A))	67
Effective electric power input (kW)	0.104