VKHz 2E 310

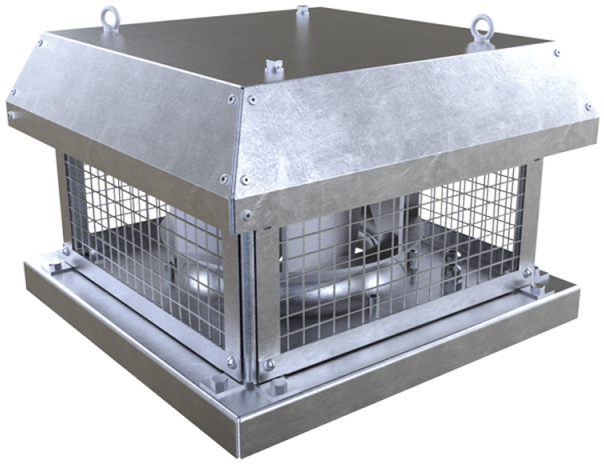

Roof centrifugal fans with horizontal air discharge

• Sound pressure level LpA at 3 m: 58
• Impeller type: Centrifugal impeller with backward curved blades
• Casing material: Galvanized steel

	Unit of measurement	VKHz 2E 310
Phases	-	1
Maximum supply voltage	V	230
Minimum supply voltage	V	230
Power supply frequency	Hz	50
Rated power	W	324
Unit current	A	1.42
Maximum airflow	m^3/h	2150
Rotation speed at 50hz	-	2620
Sound pressure level LpA at 3 m	dB(A)	58
Weight	kg	13.2
Transported air temperature (max)	°C	50
Transported air temperature (min)	°C	-25
Ingress protection rating	-	IPX4
Ingress protection rating of the drive	-	IP44
Impeller material	-	Aluminium
Size	mm	310

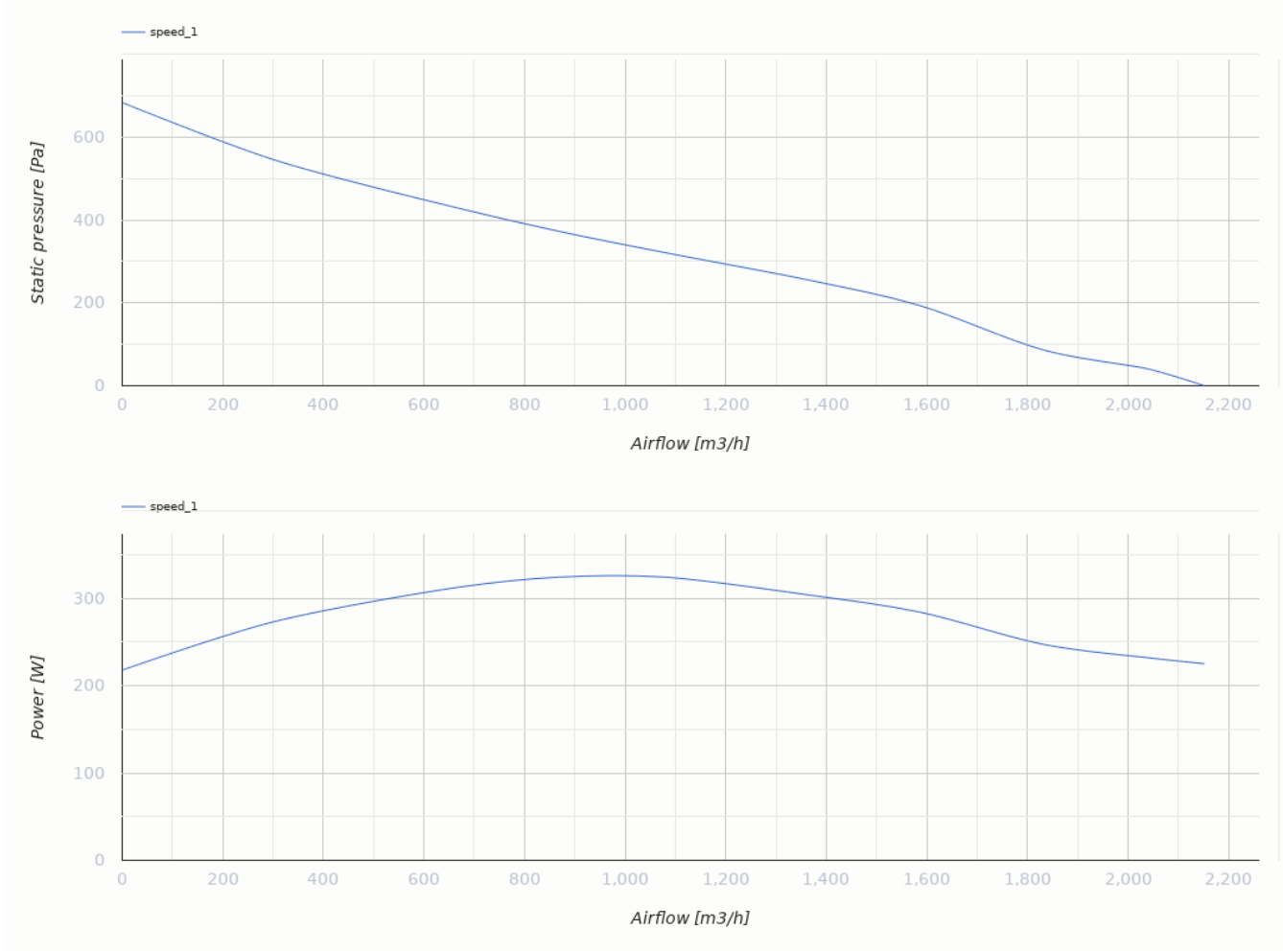

Dimensions

H	H1	A	B	C	Ød	ØD
251	258	451	450	330	11	291

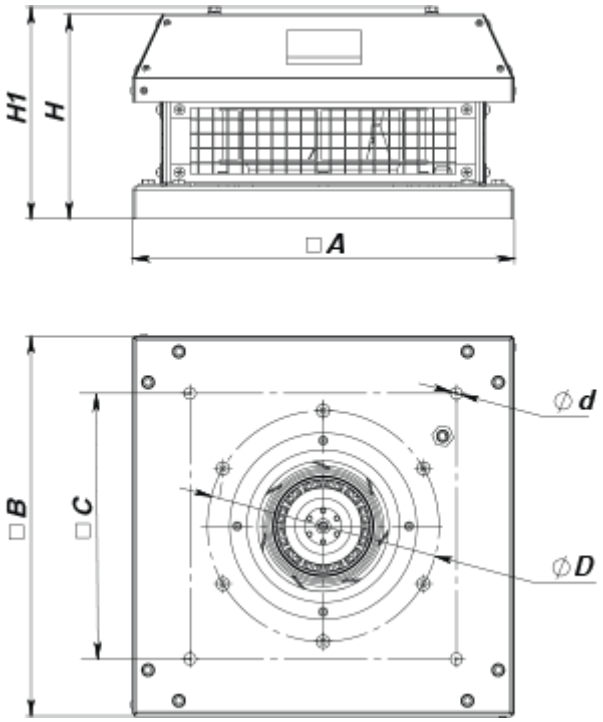

Accessories

Transformer speed controllers

Name	Photo	Description
RSA5E-3,5-T		Speed controllers are applied for air flow control of single phase fans by means of motor step speed control

Accessories for roof fans

Name	Photo	Description
RKV 250-315		Mounting frame
RKVI 250-315		Mounting frame with thermal-insulating layer
FKV 250-315		Mating flange
GKV 250-315		Flexible connector
KKV 250-315		Backdraft damper

Ecodesign

Trademark	Vents
Model	VKHz 2E 310
Type of drive installed	External MSD or VSD
Type of heat recovery system	None
Nominal external pressure (Pa)	254
Maximum external leakage rates (%)	2.7
Static efficiency (%)	32.6
Effective electric power input (kW)	0.303
Sound power level (dB(A))	78
Declared typology	NRVU UVU