VKHz 4D 310

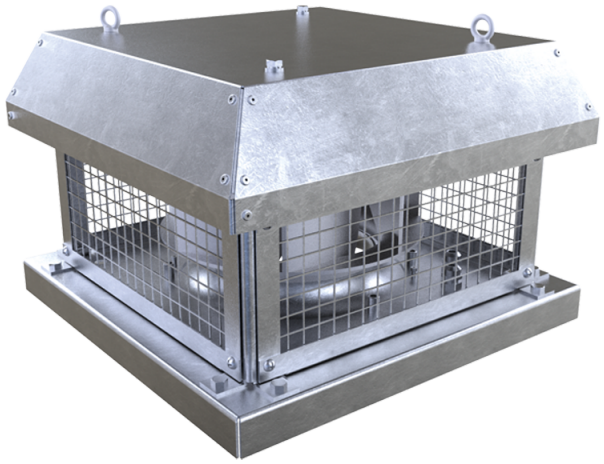

Roof centrifugal fans with horizontal air discharge

• Sound pressure level LpA at 3 m: 47
• Impeller type: Centrifugal impeller with backward curved blades
• Casing material: Galvanized steel

	Unit of measurement	VKHz 4D 310
Phases	-	3
Maximum supply voltage	V	400
Minimum supply voltage	V	400
Power supply frequency	Hz	50/60
Rated power	W	155
Unit current	A	0.29
Maximum airflow	m^3/h	2300
Rotation speed at 50hz	-	1410
Sound pressure level LpA at 3 m	dB(A)	47
Weight	kg	14.2
Transported air temperature (max)	°C	50
Transported air temperature (min)	°C	-25
Ingress protection rating	-	IPX4
Ingress protection rating of the drive	-	IP54
Impeller material	-	Aluminium
Size	mm	310

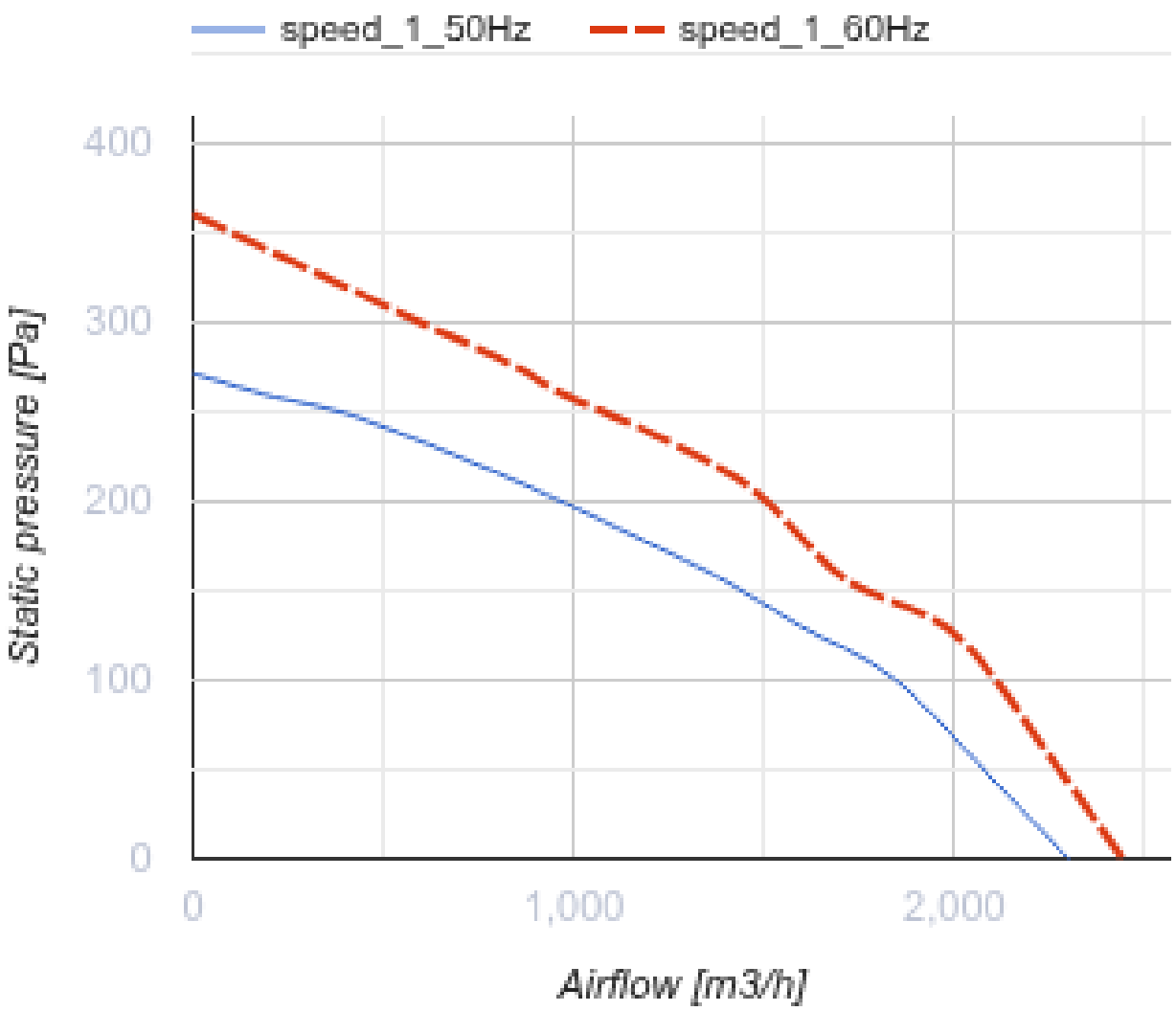
speed_1_50Hz
speed_1_60Hz
400
300
200
100
0
Static pressure [Pa]
0
1,000
2,000
Airflow [m3/h]

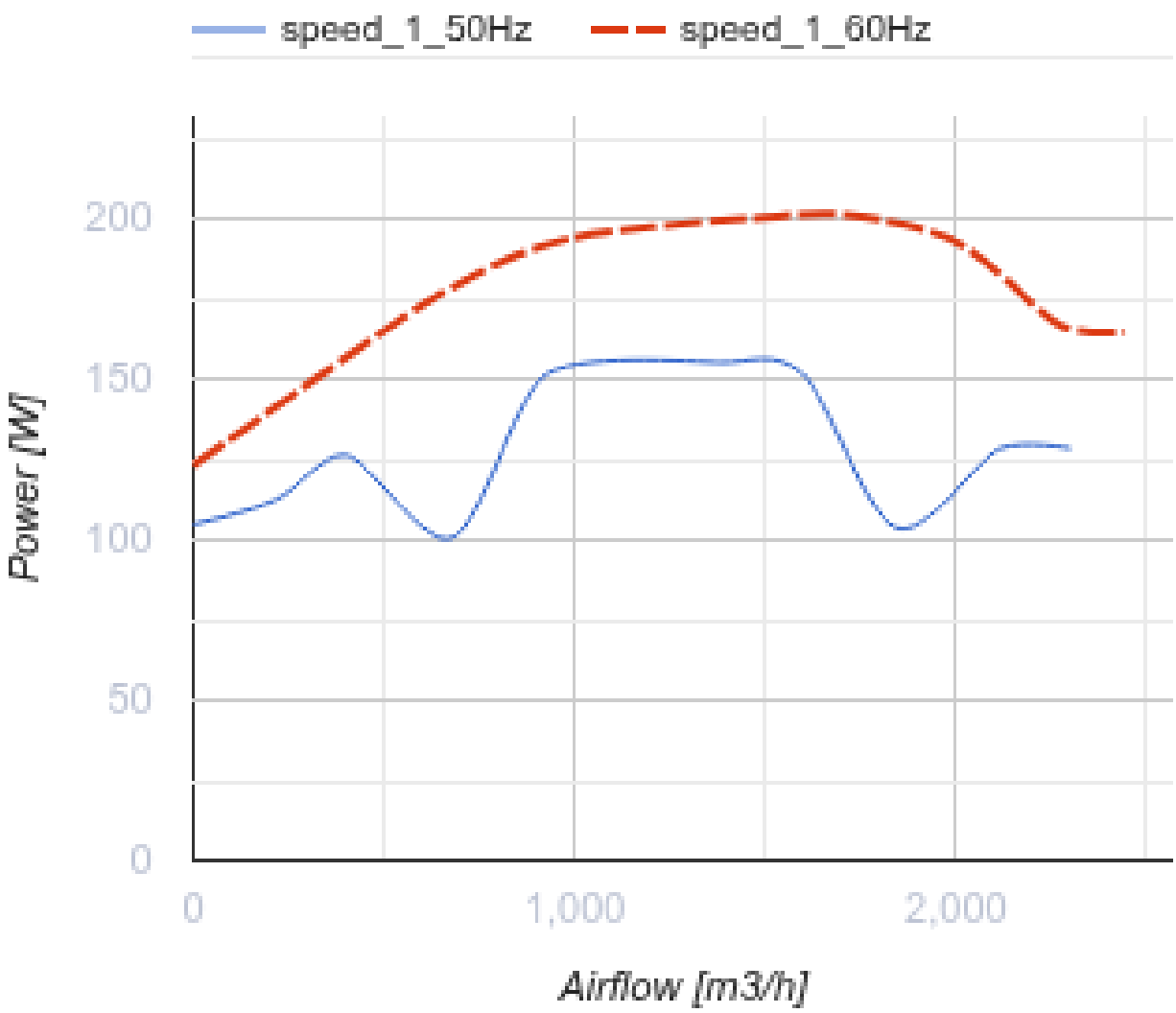

Dimensions

H	H1	A	B	C	Ød	ØD
287	294	451	450	330	11	285

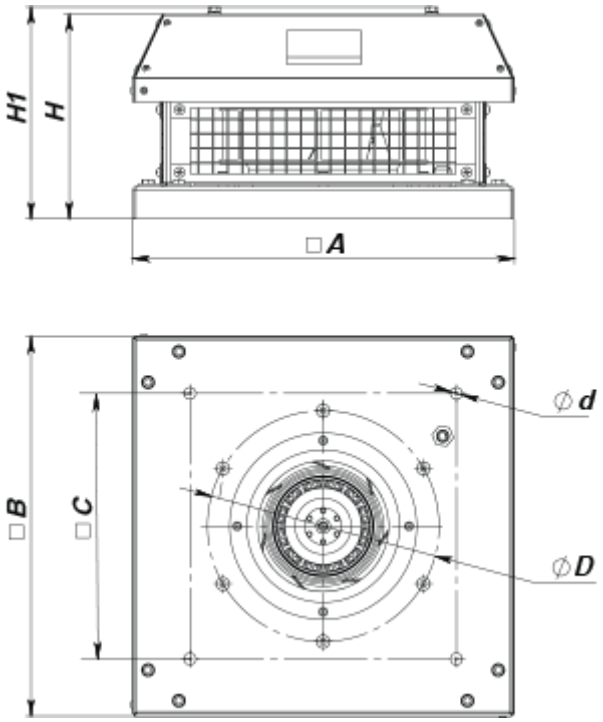

Accessories

Transformer speed controllers

Name	Photo	Description
RSA5D-1,5-M		Three phase speed controller

Accessories for roof fans

Name	Photo	Description
RKV 250-315		Mounting frame
RKVI 250-315		Mounting frame with thermal-insulating layer
FKV 250-315		Mating flange
GKV 250-315		Flexible connector
KKV 250-315		Backdraft damper

Ecodesign

Trademark	Vents
Model	VKHz 4D 310
Type of drive installed	External MSD or VSD
Type of heat recovery system	None
Nominal external pressure (Pa)	101
Maximum external leakage rates (%)	2.7
Static efficiency (%)	50.6
Effective electric power input (kW)	0.104
Sound power level (dB(A))	67
Declared typology	NRVU UVU