VKHz 4E 250

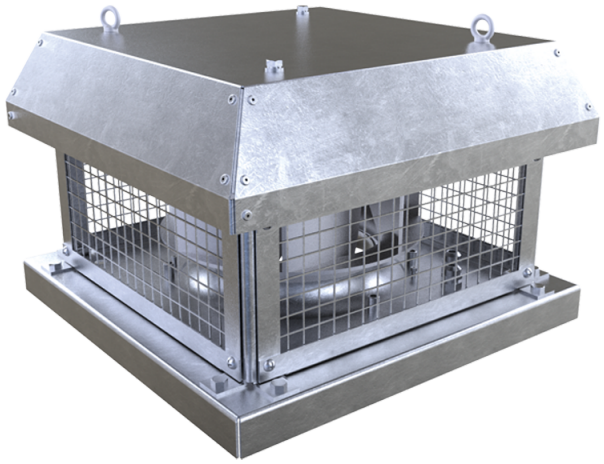

Roof centrifugal fans with horizontal air discharge

• Sound pressure level LpA at 3 m: 46
• Impeller type: Centrifugal impeller with backward curved blades
• Casing material: Galvanized steel

	Unit of measurement	VKHz 4E 250
Phases	-	1
Minimum supply voltage	V	230
Maximum supply voltage	V	230
Power supply frequency	Hz	50
Rated power	W	48
Unit current	A	0.23
Maximum airflow	m³/h	820
Rotation speed at 50hz	-	1440
Sound pressure level LpA at 3 m	dB(A)	46
Weight	kg	12.1
Transported air temperature (max)	°C	50
Transported air temperature (min)	°C	-25
Ingress protection rating	-	IPX4
Ingress protection rating of the drive	-	IP44
Impeller material	-	Plastic
Size	mm	250

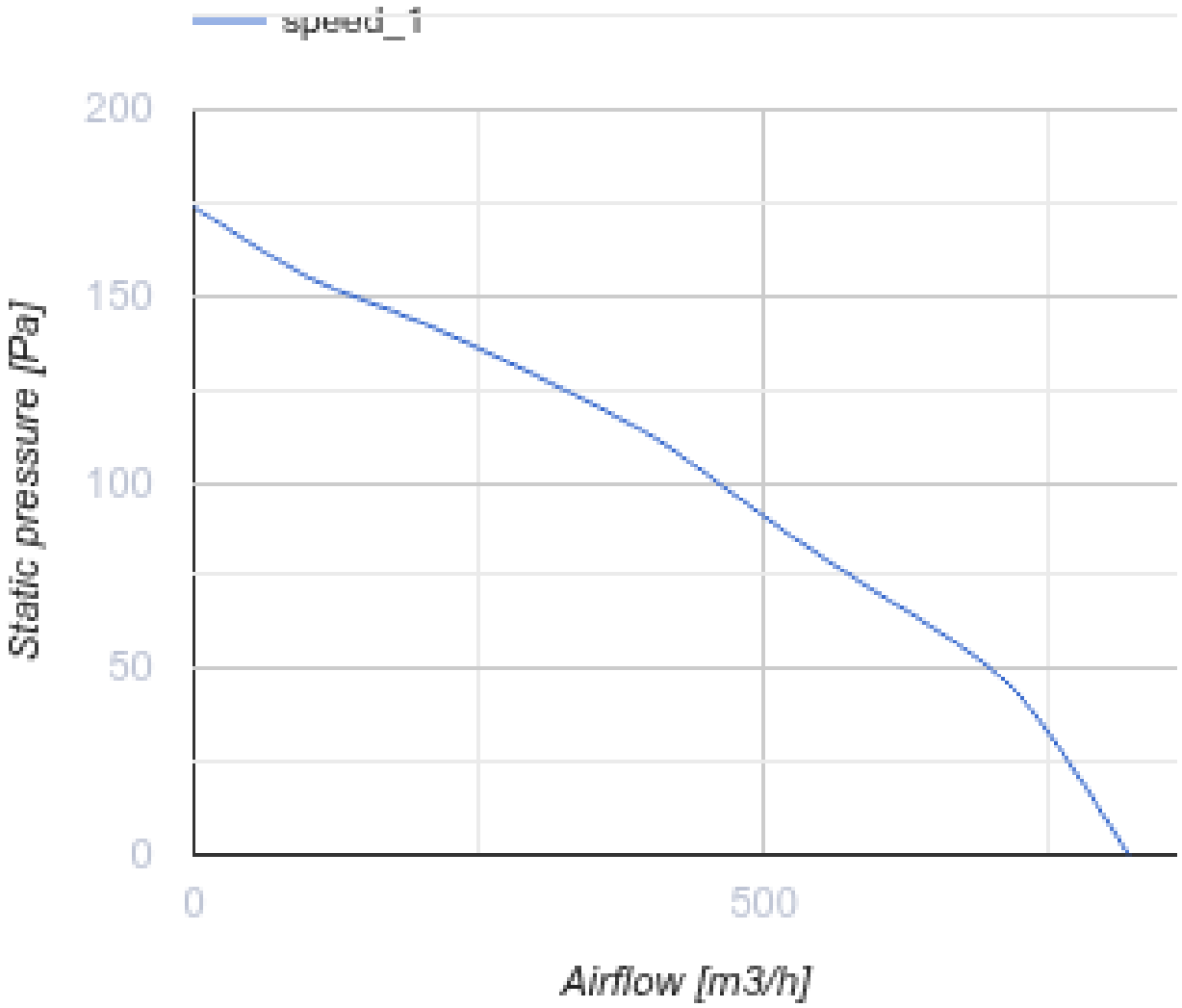
speed_1
200
150
100
50
0
0
500
Static pressure [Pa]
Airflow [m3/h]

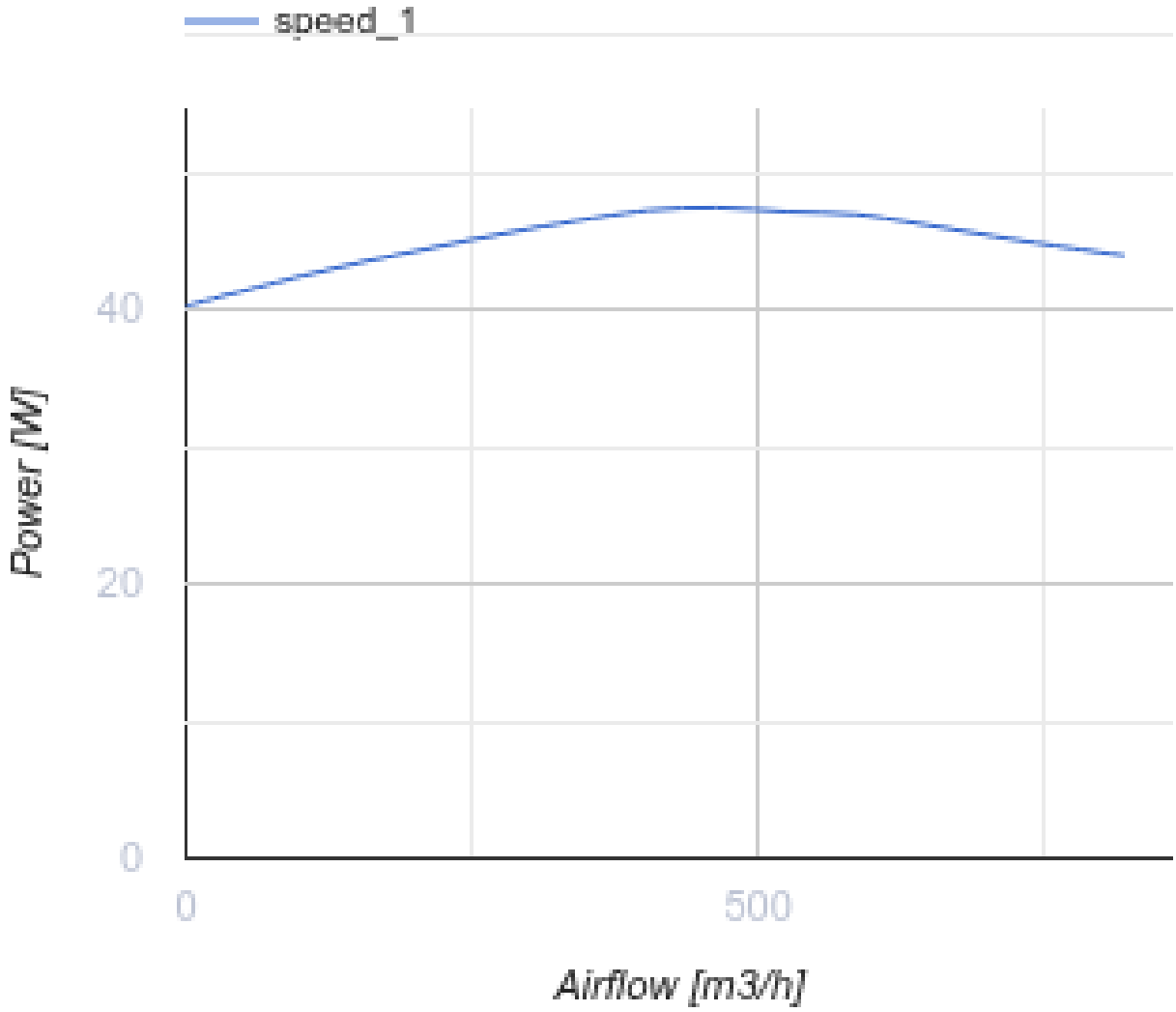

Dimensions

H	H1	A	B	C	Ød	ØD
237	244	451	450	330	11	285

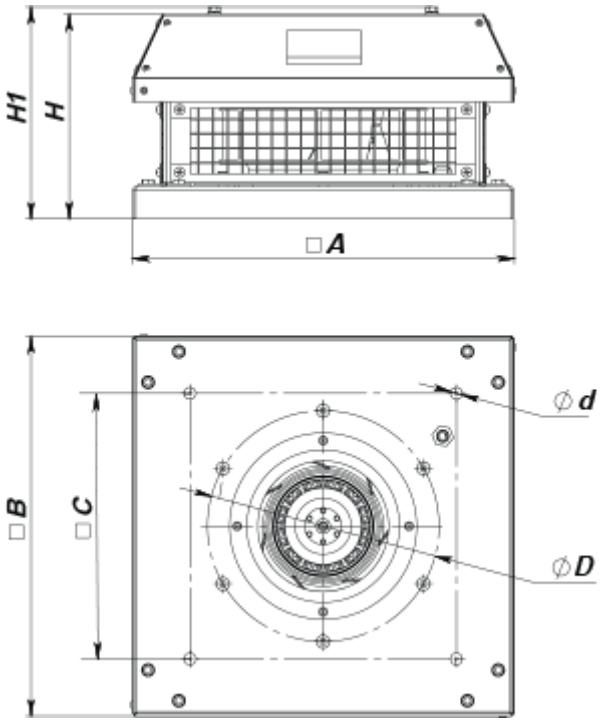

Accessories

Accessories for roof fans

Name	Photo	Description
RKV 250-315		Mounting frame
RKVI 250-315		Mounting frame with thermal-insulating layer
FKV 250-315		Mating flange
GKV 250-315		Flexible connector
KKV 250-315		Backdraft damper

Ecodesign

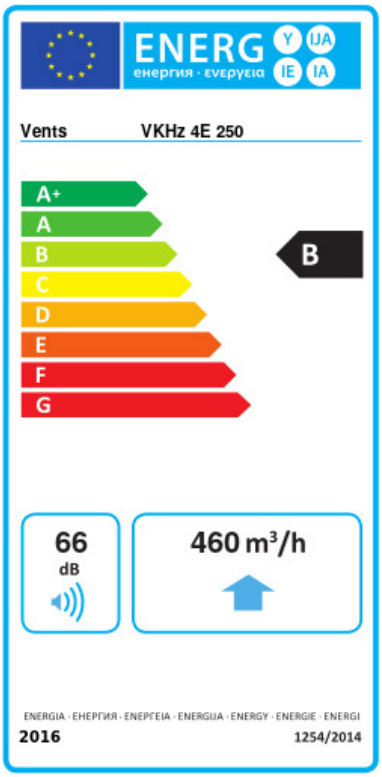

Trademark	Vents					
Model	VKHz 4E 250					
Specific energy consumption (SEC) (kWh/(m²/a))	Cold		Average		Warm	
	-53.4	A+	-26.4	B	-10.9	E
Type of ventilation unit	Unidirectional					
Type of drive installed	Variable speed					
Type of heat recovery system	None					
Maximum flow rate (m³/h)	460					
Electric power input (W)	47					
Reference flow rate (m³/s)	0.089					
Reference pressure difference (Pa)	50					
Specific power input (SPI) (W/(m³/h))	0.146					
Control typology	Local demand control					
Maximum external leakage rates (%)	2.7					
Sound power level (dB(A))	66					
Declared typology	RVU UVU					
The annual electricity consumption (AEC) (kWh/a)	Cold		Average		Warm	
	77		77		77	
The annual heating saved (AHS) (kWh/a)	Cold		Average		Warm	
	5536		2830		1280	