VKHz 6E 500

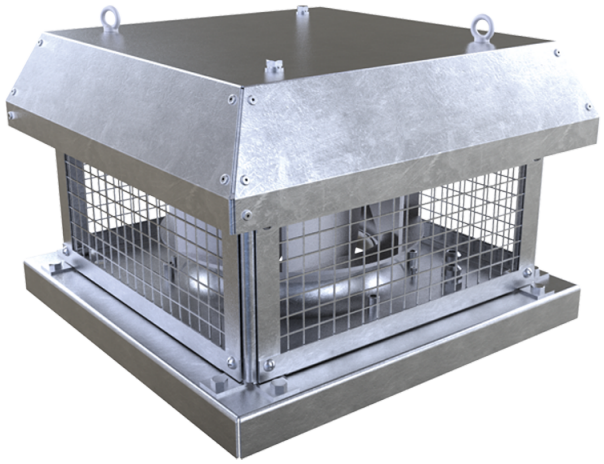

Roof centrifugal fans with horizontal air discharge

• Sound pressure level LpA at 3 m: 52
• Impeller type: Centrifugal impeller with backward curved blades
• Casing material: Galvanized steel

	Unit of measurement	VKHz 6E 500
Phases	-	1
Minimum supply voltage	V	230
Maximum supply voltage	V	230
Power supply frequency	Hz	50/60
Rated power	W	407
Unit current	A	1.81
Maximum airflow	m^3/h	5680
Rotation speed at 50hz	-	970
Sound pressure level LpA at 3 m	dB(A)	52
Weight	kg	52.8
Transported air temperature (max)	°C	60
Transported air temperature (min)	°C	-25
Ingress protection rating	-	IPX4
Ingress protection rating of the drive	-	IP54
Impeller material	-	Aluminium
Size	mm	500

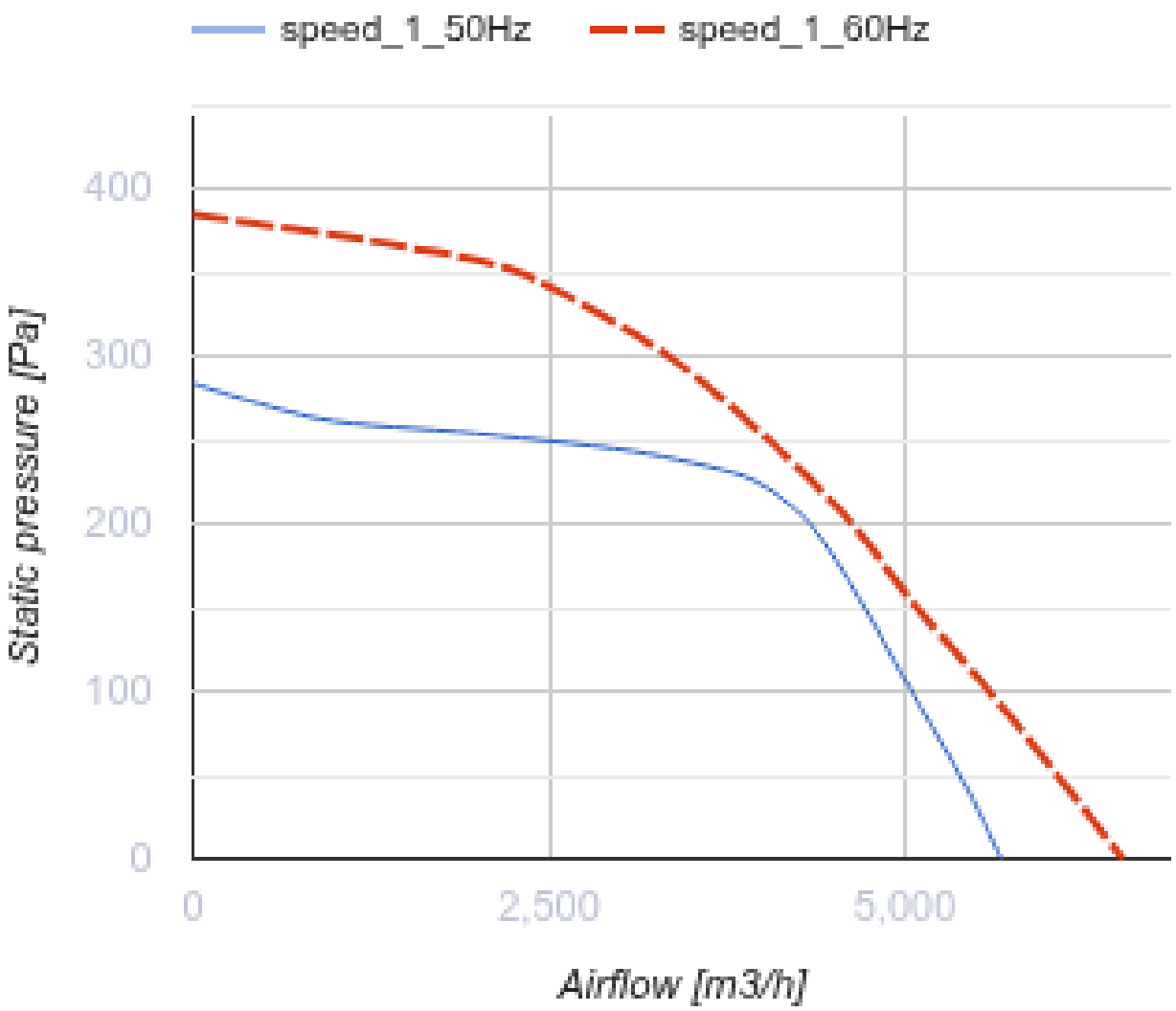
speed_1_50Hz
speed_1_60Hz
400
300
200
100
0
Static pressure [Pa]
0
2,500
5,000
Airflow [m3/h]

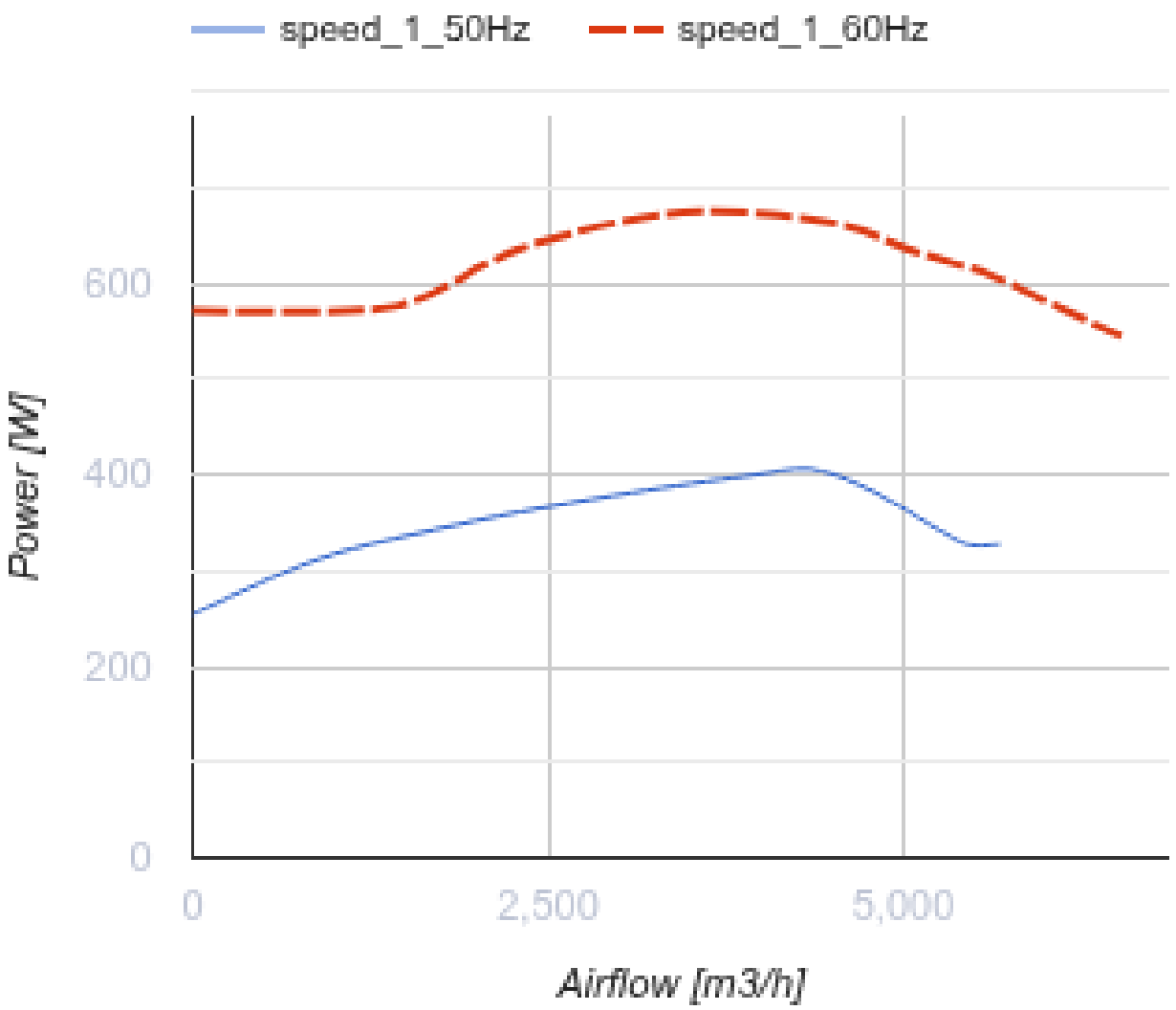

Dimensions

H	H1	A	B	C	Ød	ØD
461	501	710	700	535	11	438

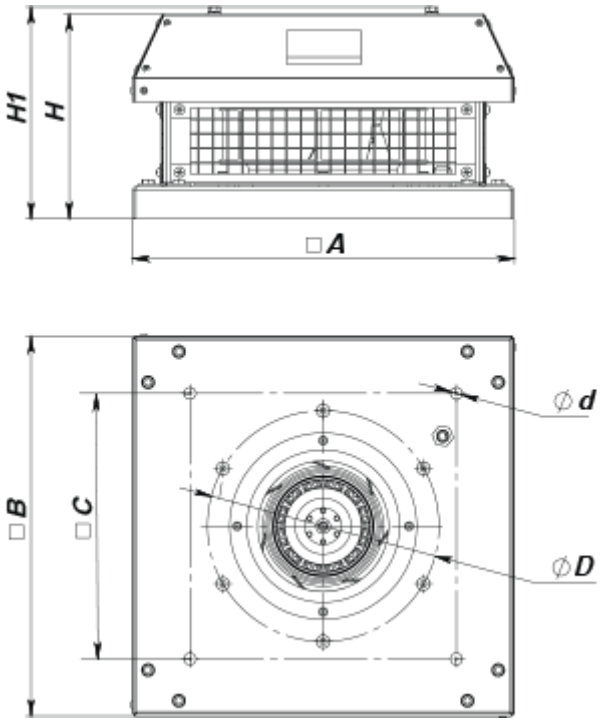

Accessories

Transformer speed controllers

Name	Photo	Description
RSA5E-3,5-T		Speed controllers are applied for air flow control of single phase fans by means of motor step speed control

Accessories for roof fans

Name	Photo	Description
RKV 450-500		Mounting frame
RKVI 450-500		Mounting frame with thermal-insulating layer
FKV 355-500		Mating flange
GKV 355-500		Flexible connector
KKV 355-500		Backdraft damper

Ecodesign

Trademark	Vents
Model	VKHz 6E 500
Type of drive installed	External MSD or VSD
Type of heat recovery system	None
Nominal external pressure (Pa)	226
Maximum external leakage rates (%)	2.7
Static efficiency (%)	63.1
Declared typology	NRVU UVU
Effective electric power input (kW)	0.4
Sound power level (dB(A))	72