# VKM 250 EC



Centrifugal inline fans with EC-motors

• Sound pressure level LpA at 3 m: 49
• Impeller type: Centrifugal impeller with backward curved blades
• Casing material: Coated steel
• Installation in any position

| | Unit of measurement | VKM 250 EC |
|---|---|---|
| Connected air duct size | mm | 250 |
| Phases | - | 1 |
| Minimum supply voltage | V | 230 |
| Maximum supply voltage | V | 230 |
| Power supply frequency | Hz | 50/60 |
| Rated power | W | 161 |
| Unit current | A | 1.25 |
| Maximum airflow | m³/h | 1300 |
| Rotation speed at 50hz | - | 3820 |
| Sound pressure level LpA at 3 m | dB(A) | 49 |
| Weight | kg | 5.8 |
| Transported air temperature (max) | °C | 60 |
| Transported air temperature (min) | °C | -25 |
| Ingress protection rating | - | IPX4 |
| Ingress protection rating of the drive | - | IP44 |
| Impeller material | - | Plastic |

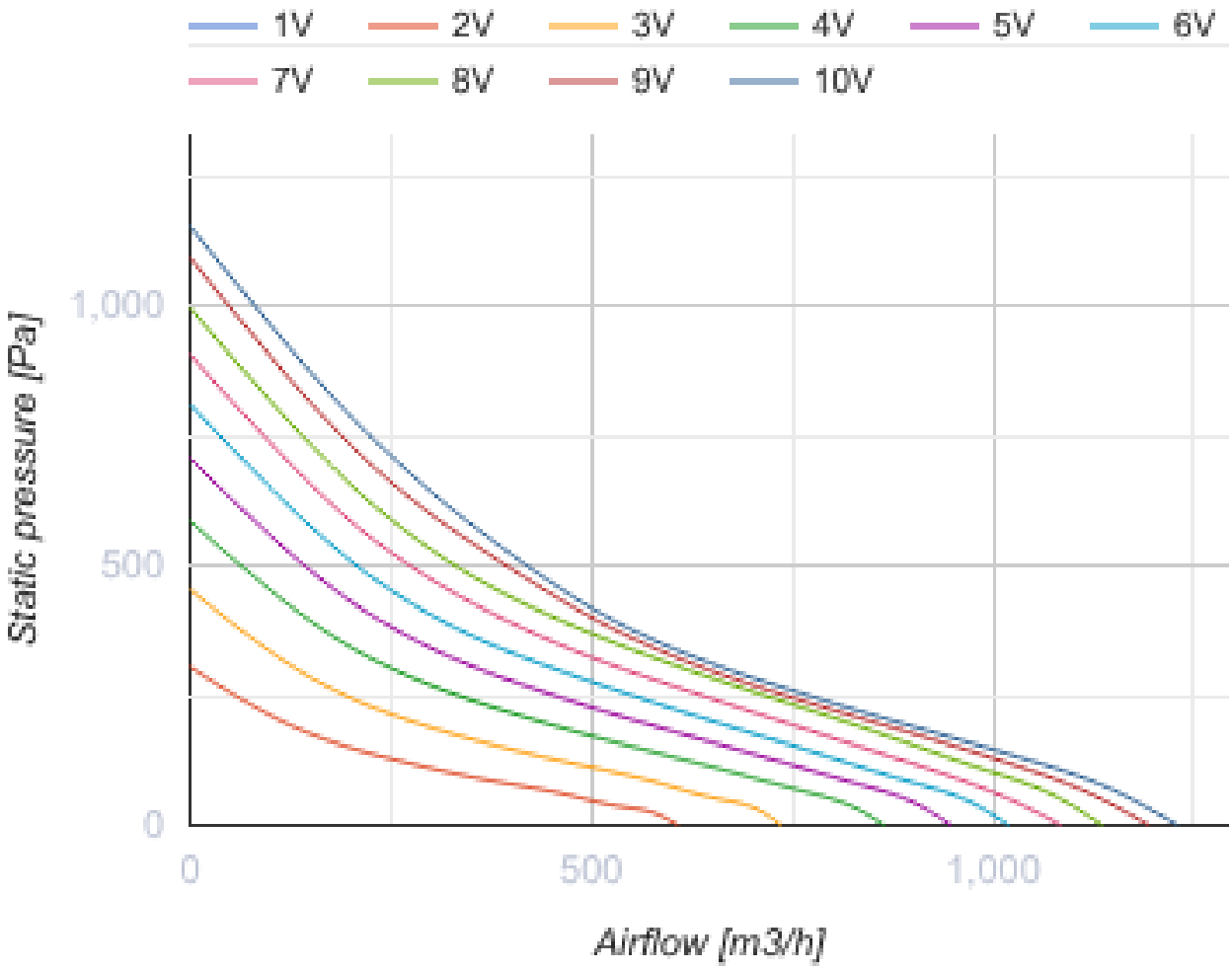
1V
2V
3V
4V
5V
6V
7V
8V
9V
10V
Static pressure [Pa]
1,000
500
0
0
500
1,000
Airflow [m3/h]

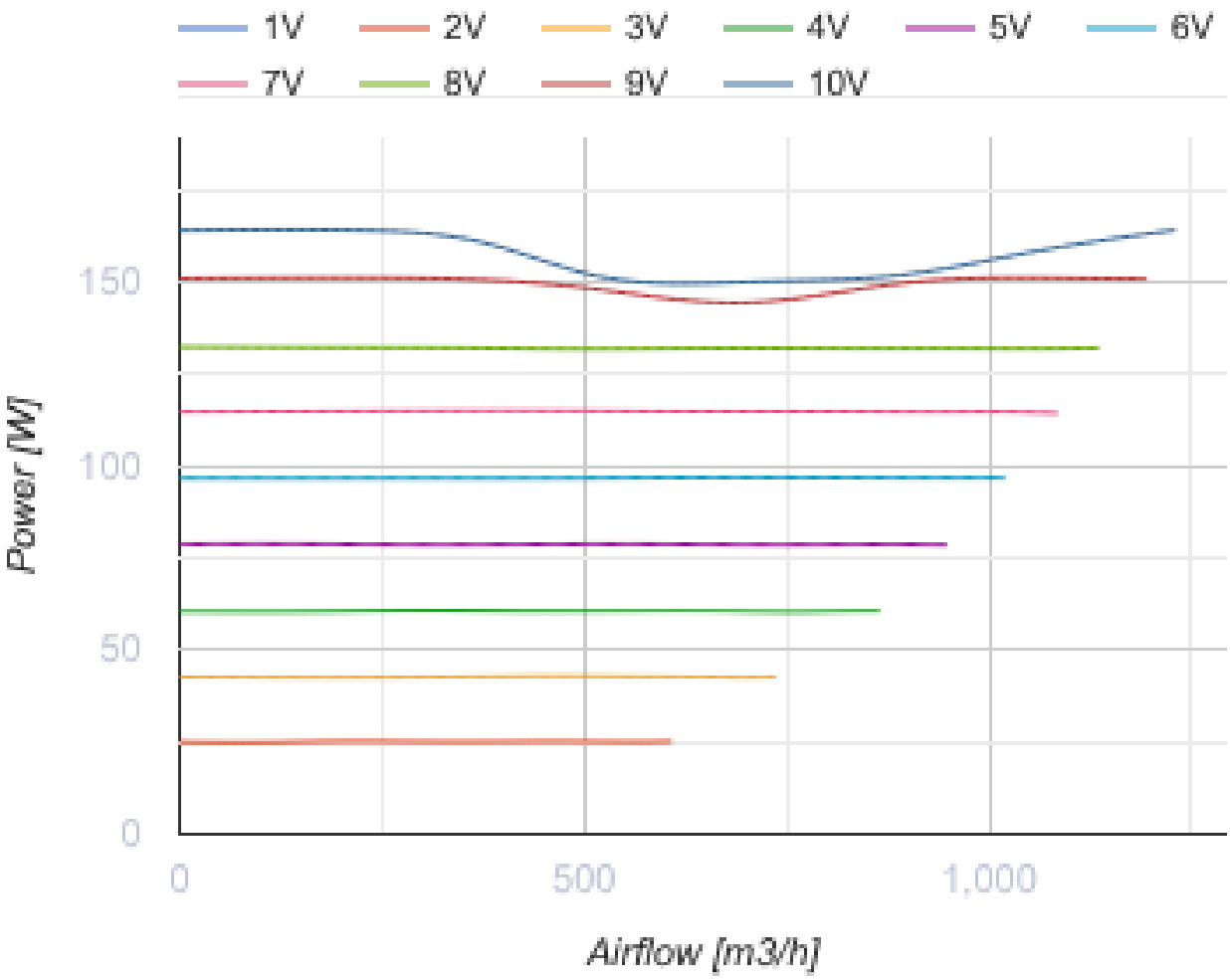


## Dimensions

| ØD | ØD1 | B | B1 | H | L | L1 | L2 | L3 |
|---|---|---|---|---|---|---|---|---|
| 248 | 345 | 395 | 355 | 435 | 250 | 25 | 30 | 40 |

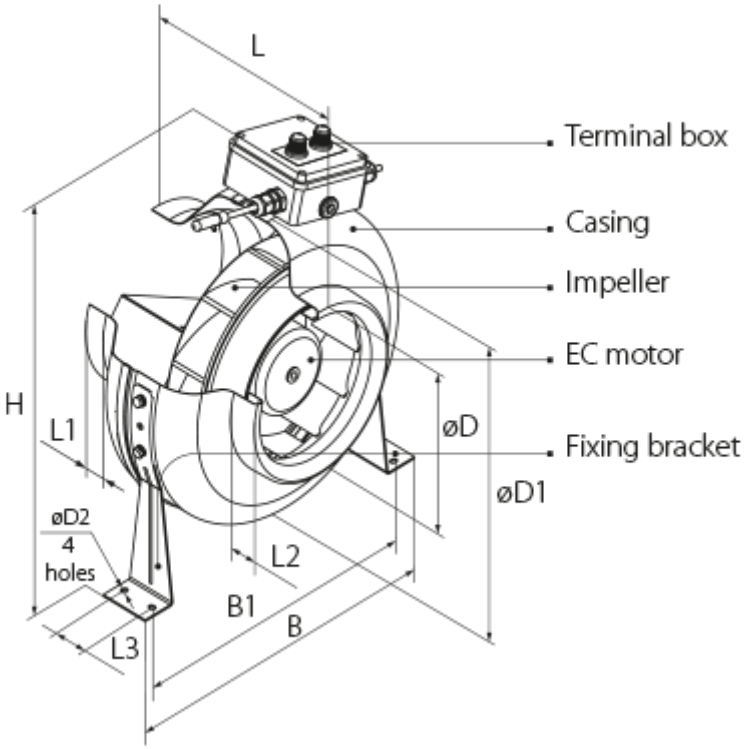
L
Terminal box
Casing
Impeller
EC motor
H
L1
øD
Fixing bracket
øD1
øD2
4
holes
L2
B1
B
L3

## Ecodesign

| Trademark | Vents |
|---|---|
| Model | VKM 250 EC |
| Type of drive installed | Integrated VSD |
| Type of heat recovery system | None |
| Nominal external pressure (Pa) | 413 |
| Maximum external leakage rates (%) | 2.7 |
| Static efficiency (%) | 44.7 |
| Declared typology | NRVU UVU |
| Effective electric power input (kW) | 0.152 |
| Sound power level (dB(A)) | 66 |