VKM 400 EC



Centrifugal inline fans with EC-motors

• Sound pressure level LpA at 3 m: 67
• Impeller type: Centrifugal impeller with backward curved blades
• Casing material: Coated steel
• Installation in any position

	Unit of measurement	VKM 400 EC
Connected air duct size	mm	400
Phases	-	1
Minimum supply voltage	V	230
Maximum supply voltage	V	230
Power supply frequency	Hz	50/60
Rated power	W	704
Unit current	A	3.13
Maximum airflow	m³/h	4790
Rotation speed at 50hz	-	2206
Sound pressure level LpA at 3 m	dB(A)	67
Weight	kg	18.6
Transported air temperature (max)	°C	60
Transported air temperature (min)	°C	-25
Ingress protection rating	-	IPX4
Ingress protection rating of the drive	-	IP44
Impeller material	-	Aluminium

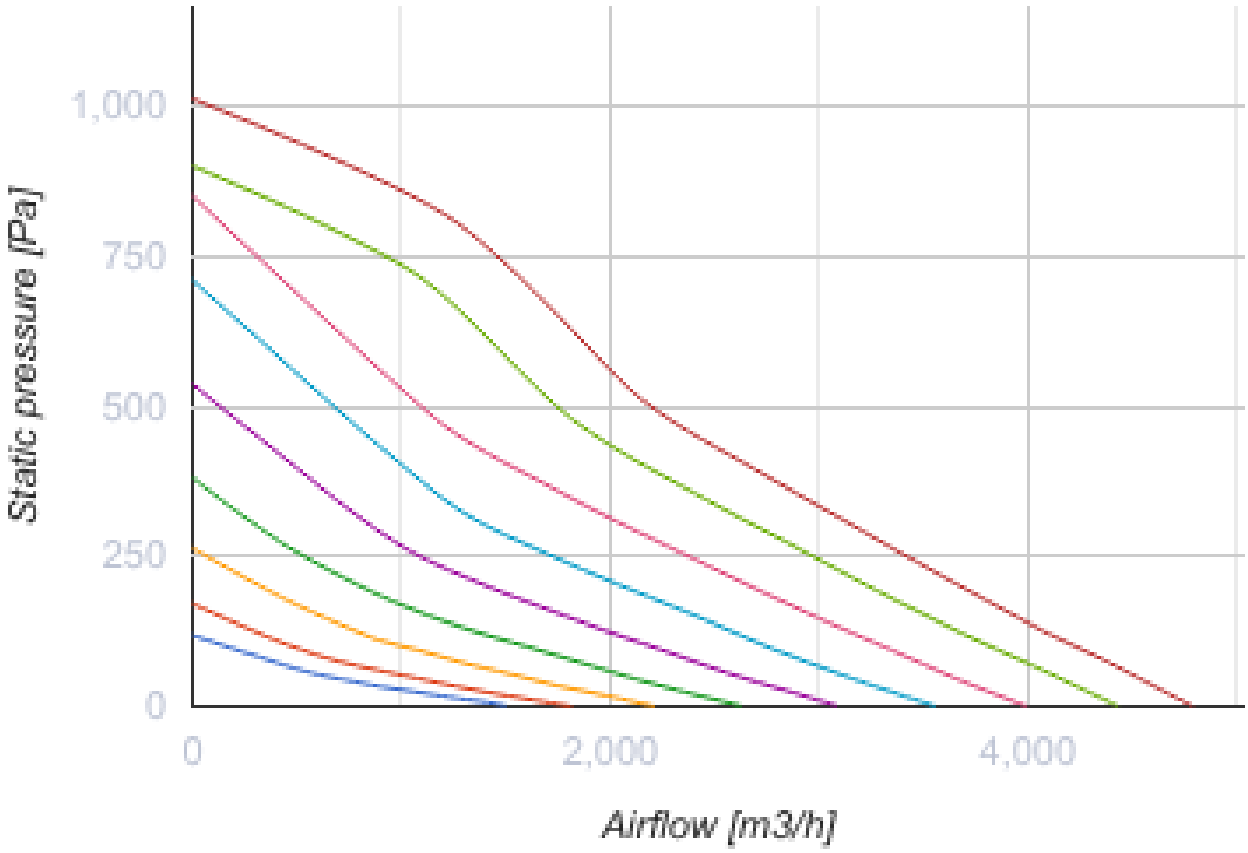
Static pressure [Pa]
1,000
750
500
250
0
0
2,000
4,000
Airflow [m3/h]

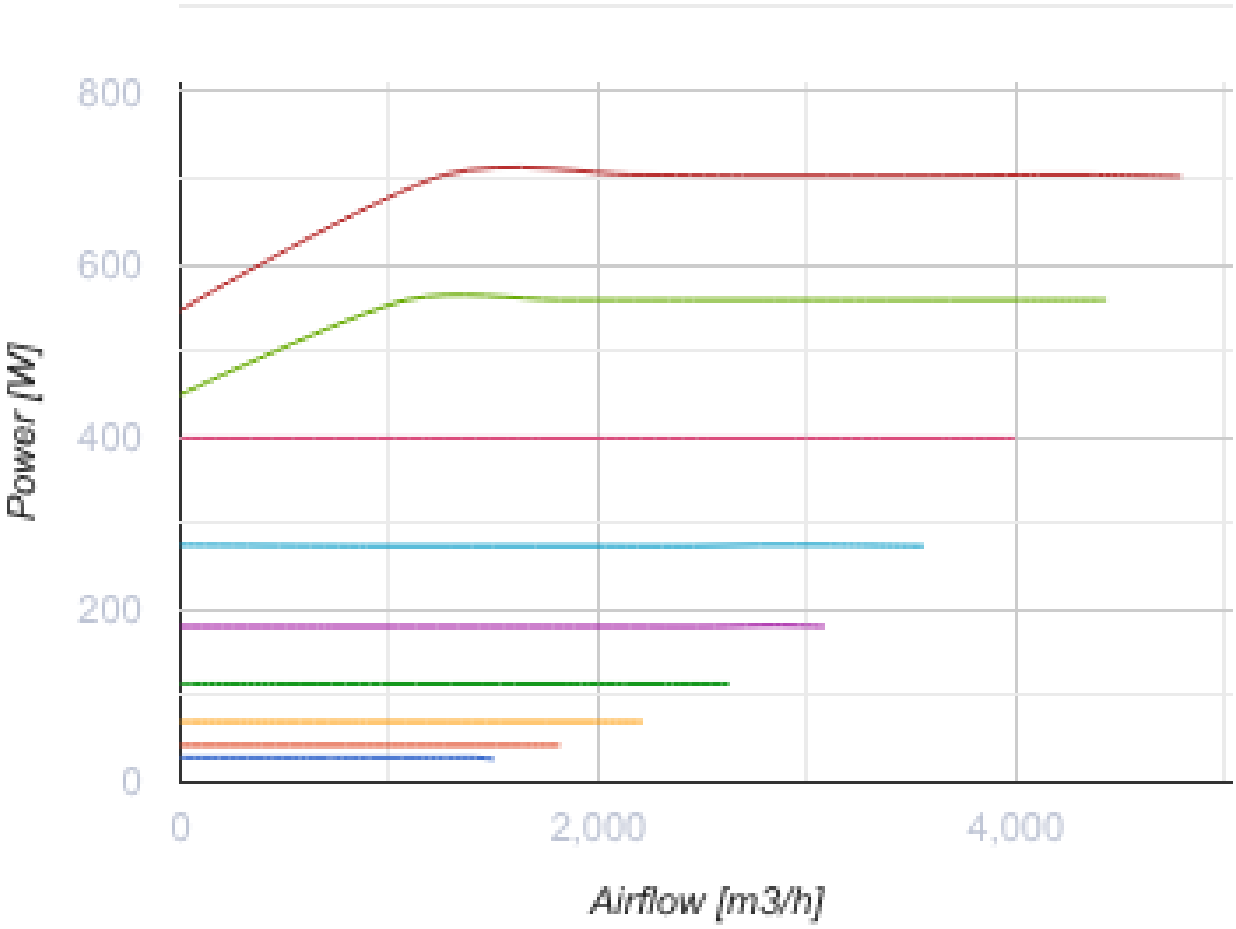

Dimensions

ØD	ØD1	B	B1	L	L1	L2	L3	ØD2
398	568	663	633	599	60	60	70	9

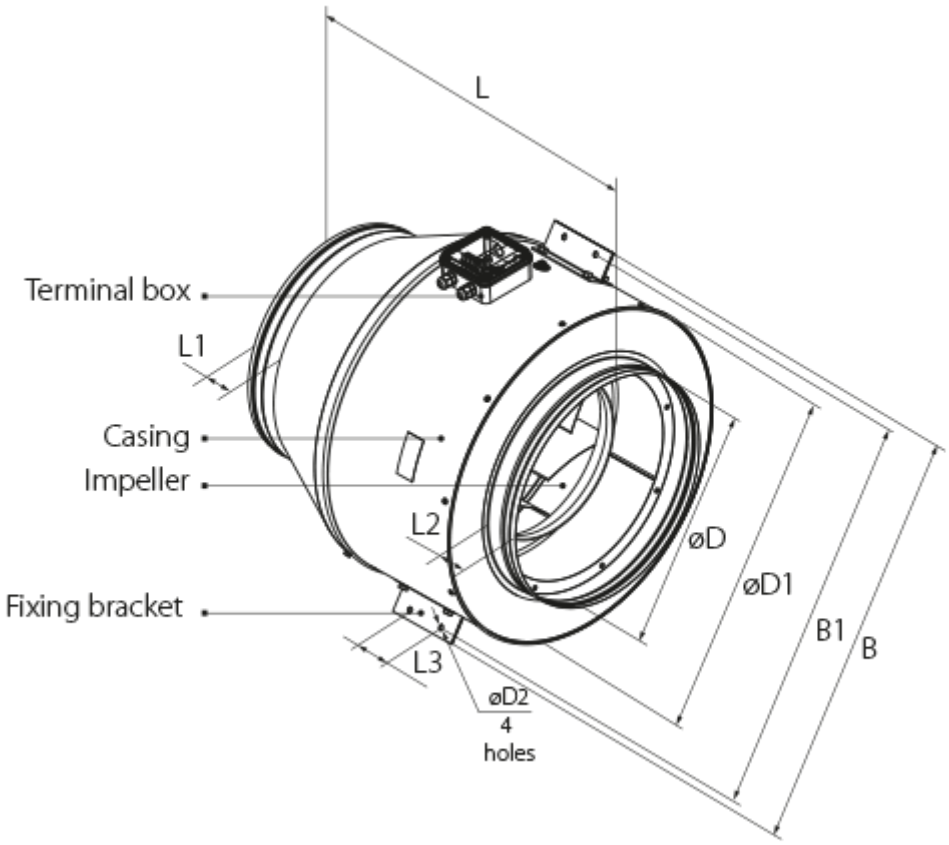
L
Terminal box
L1
Casing
Impeller
L2
Fixing bracket
L3
øD2
4
holes
øD
øD1
B1
B

Ecodesign

Trademark	Vents
Model	VKM 400 EC
Type of drive installed	Integrated VSD
Type of heat recovery system	None
Nominal external pressure (Pa)	508
Maximum external leakage rates (%)	2.7
Static efficiency (%)	48.5
Declared typology	NRVU UVU
Effective electric power input (kW)	0.704
Sound power level (dB(A))	71