VKMK 315

Roof centrifugal fans

• Sound pressure level LpA at 3 m: 54
• Impeller type: Centrifugal impeller with backward curved blades
• Casing material: Coated steel

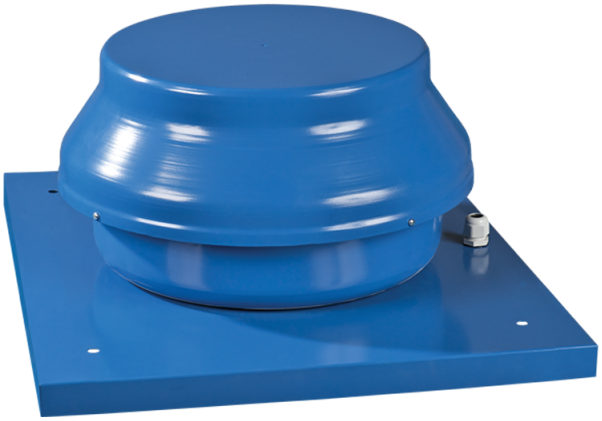

	Unit of measurement	VKMK 315
Connected air duct size	mm	315
Phases	-	1
Minimum supply voltage	V	220
Maximum supply voltage	V	240
Power supply frequency	Hz	50/60
Rated power	W	296
Unit current	A	1.34
Maximum airflow	m^3/h	1880
Rotation speed at 50hz	-	2720
Sound pressure level LpA at 3 m	dB(A)	54
Weight	kg	12.3
Transported air temperature (max)	°C	45
Transported air temperature (min)	°C	-25
Ingress protection rating	-	IPX4
Ingress protection rating of the drive	-	IP44
Impeller material	-	Plastic
Size	mm	315

Dimensions

ØD	ØD1	H	L	L1
315	550	339	590	450

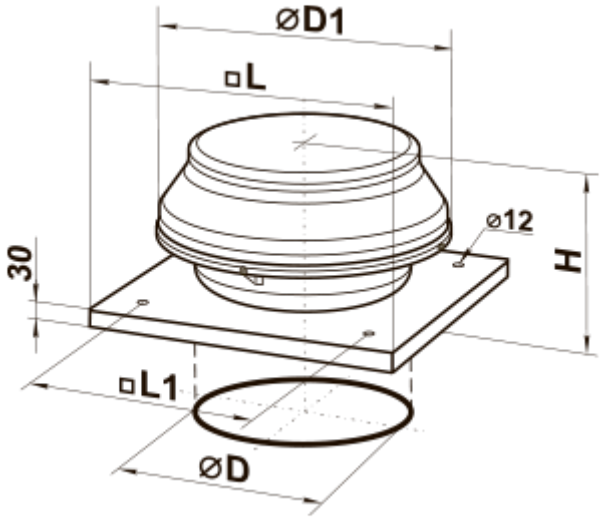

Accessories

Transformer speed controllers

Name	Photo	Description
RSA5E-3,5-T		Speed controllers are applied for air flow control of single phase fans by means of motor step speed control
RSA5E-5,0-T		Speed controllers are applied for air flow control of single phase fans by means of motor step speed control
RSA5E-7,5-T		Speed controllers are applied for air flow control of single phase fans by means of motor step speed control

Accessories for roof fans

Name	Photo	Description
RKV 250-315		Mounting frame
RKVI 250-315		Mounting frame with thermal-insulating layer

Ecodesign

Trademark	Vents
Model	VKMK 315
Type of drive installed	External MSD or VSD
Type of heat recovery system	None
Nominal external pressure (Pa)	428
Maximum external leakage rates (%)	2.7
Static efficiency (%)	36.2
Effective electric power input (kW)	0.269
Sound power level (dB(A))	74
Declared typology	NRVU UVU