VKMz 200 EC



Inline centrifugal fans in galvanized casing with EC-motors

- Sound pressure level LpA at 3 m: 49
- Impeller type: Centrifugal impeller with backward curved blades
- Casing material: Galvanized steel
- Installation in any position

	Unit of measurement	VKMz 200 EC
Connected air duct size	mm	200
Phases	-	1
Minimum supply voltage	V	230
Maximum supply voltage	V	230
Power supply frequency	Hz	50/60
Rated power	W	116
Unit current	A	0.95
Maximum airflow	m³/h	900
Rotation speed at 50hz	-	3959
Sound pressure level LpA at 3 m	dB(A)	49
Weight	kg	3.9
Transported air temperature (max)	°C	60
Transported air temperature (min)	°C	-25
Ingress protection rating	-	IPX4
Impeller material	-	Plastic

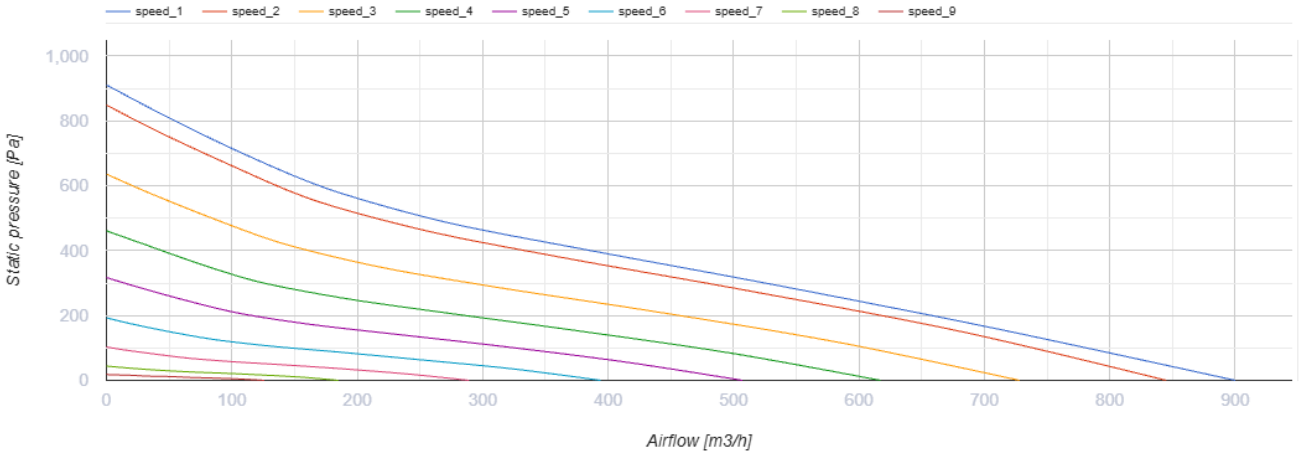

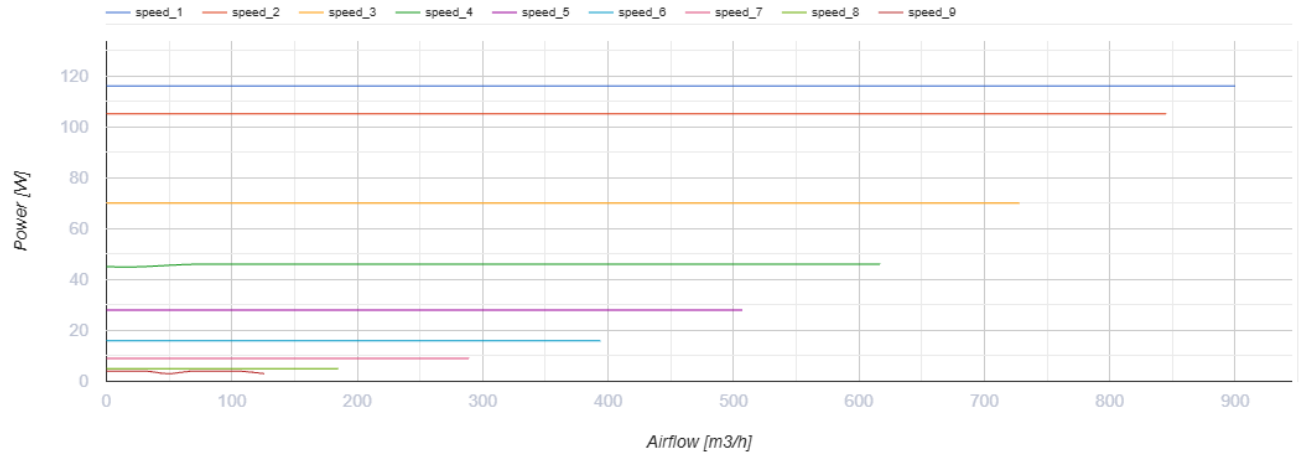

Dimensions

ØD	ØD1	H	L	L1	L2
198	345	400	245	25	25

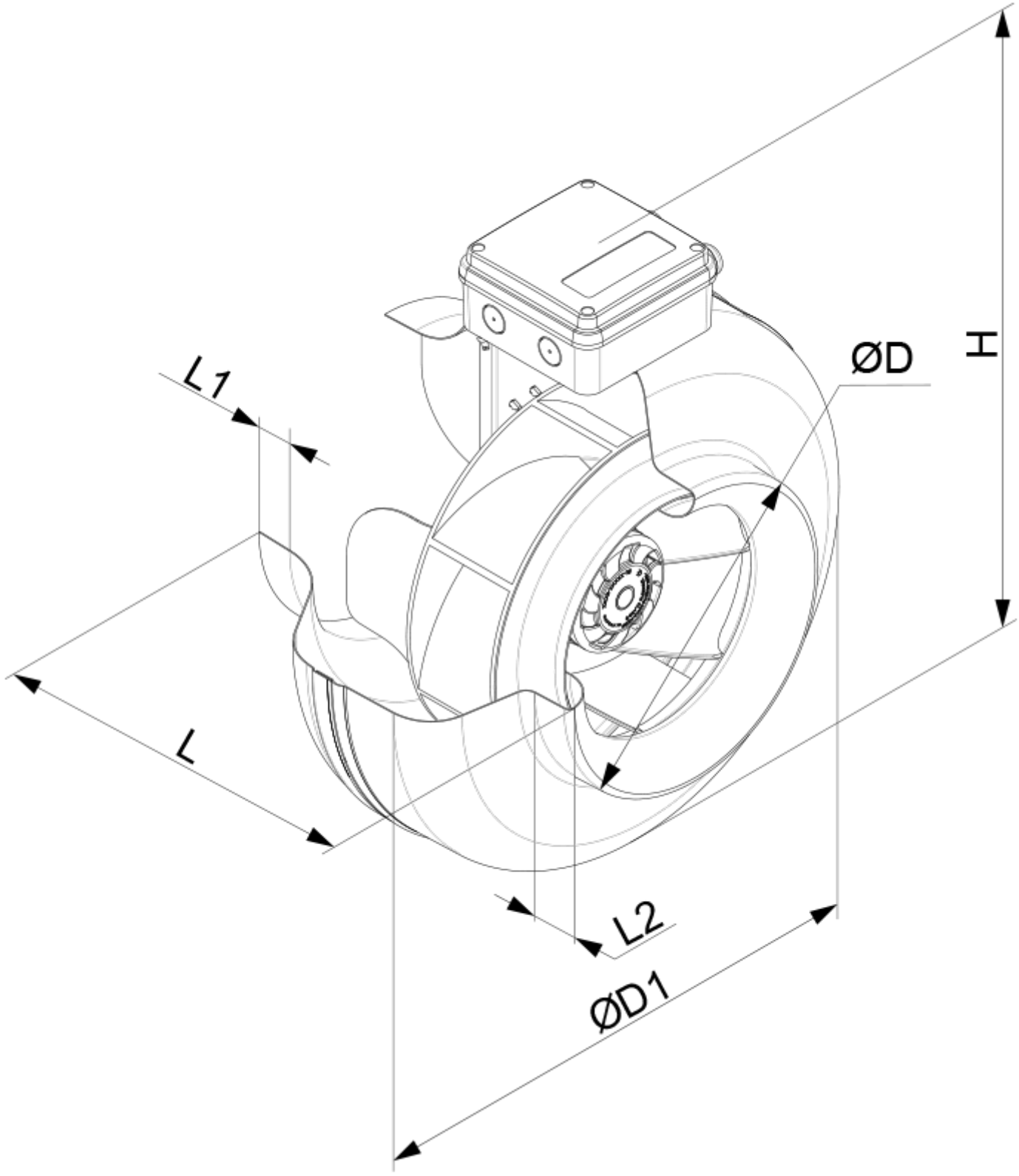

Accessories

Speed controllers for EC motors

Name	Photo	Description

R-1/010		Speed controller for EC motors

Ecodesign

Trademark	Vents
Model	VKMz 200 EC
Type of drive installed	External MSD or VSD
Type of heat recovery system	None
Nominal external pressure (Pa)	401
Maximum external leakage rates (%)	2.7
Static efficiency (%)	37.7
Effective electric power input (kW)	0.116
Sound power level (dB(A))	69
Declared typology	NRVU UVU