VKMz 250



Centrifugal inline fans in galvanized casing

• Sound pressure level LpA at 3 m: 52
• Impeller type: Centrifugal impeller with backward curved blades
• Casing material: Galvanized steel
• Installation in any position

	Unit of measurement	VKMz 250	
Connected air duct size	mm	250	
Phases	-	1	
Minimum supply voltage	V	220	
Maximum supply voltage	V	240	
Power supply frequency	Hz	50	60
Rated power	W	152	
Unit current	A	0.66	
Maximum airflow	m^3/h	1070	
Rotation speed at 50hz	-	2765	
Sound pressure level LpA at 3 m	dB(A)	52	
Weight	kg	5.1	
Transported air temperature (max)	°C	50	
Transported air temperature (min)	°C	-25	
Ingress protection rating	-	IPX4	
Ingress protection rating of the drive	-	IP44	
Impeller material	-	Plastic	

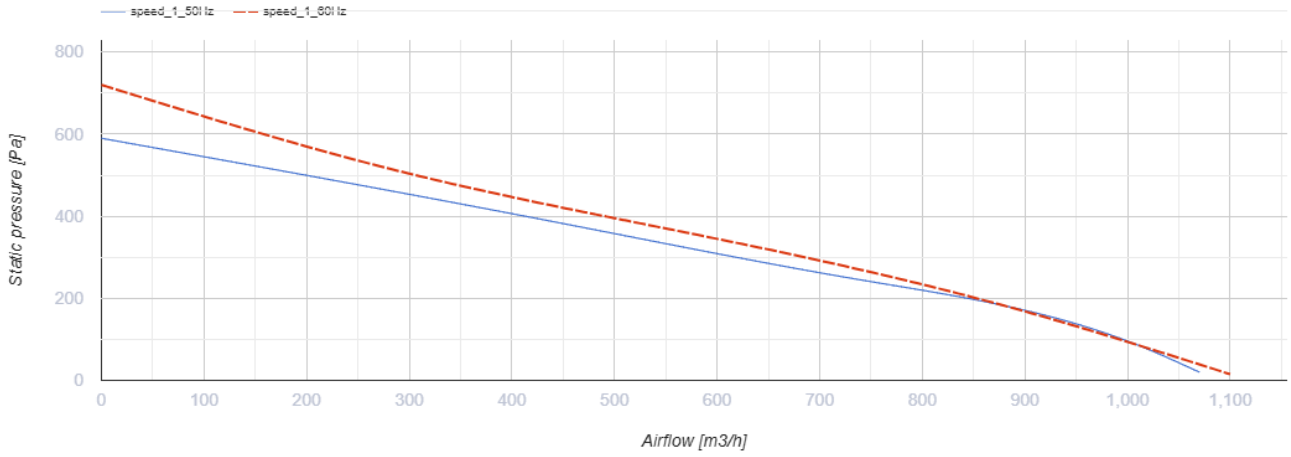

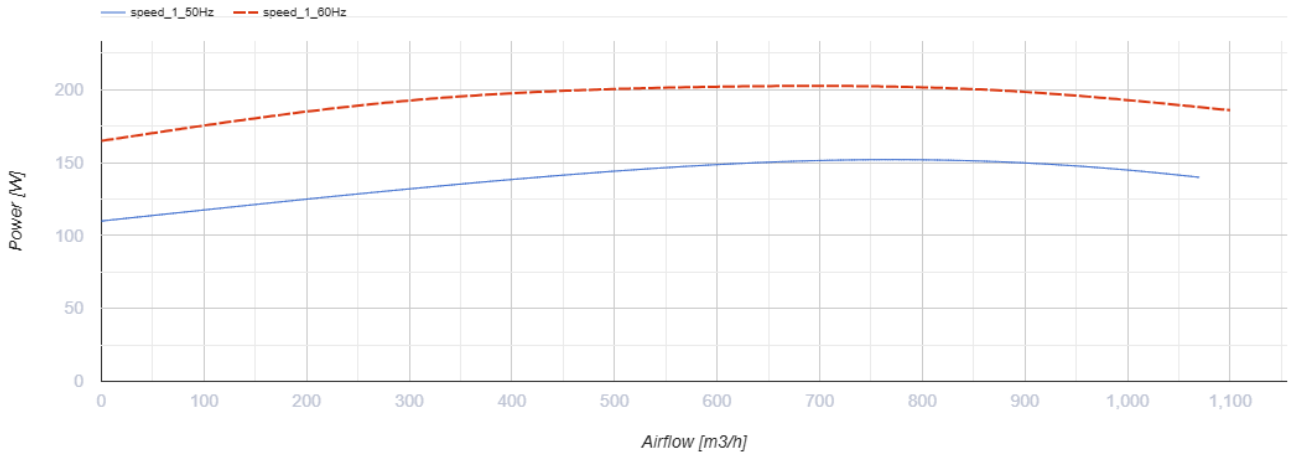

Dimensions

ØD	ØD1	B	B1	L	L1	L2	L3
249	332	340	380	213	25	29	40

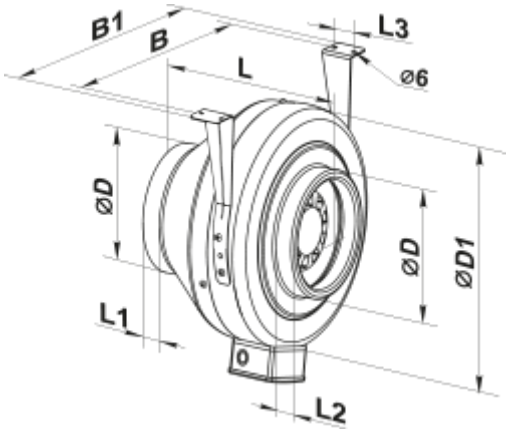

Ecodesign

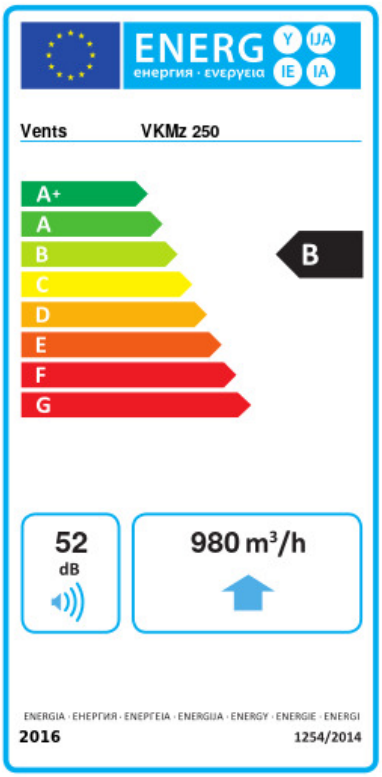

Trademark	Vents					
Model	VKMz 250					
Specific energy consumption (SEC) (kWh/(m²/a))	Cold		Average		Warm	
	-53.7	A+	-26.7	B	-11.2	E
Type of ventilation unit	Unidirectional					
Type of drive installed	Variable speed					
Type of heat recovery system	None					
Maximum flow rate (m³/h)	980					
Electric power input (W)	152					
Reference flow rate (m³/s)	0.191					
Reference pressure difference (Pa)	50					
Specific power input (SPI) (W/(m³/h))	0.122					
Control typology	Local demand control					
Maximum external leakage rates (%)	2.7					
Sound power level (dB(A))	52					
Declared typology	RVU UVU					
The annual electricity consumption (AEC) (kWh/a)	Cold		Average		Warm	
	64		64		64	
The annual heating saved (AHS) (kWh/a)	Cold		Average		Warm	
	5536		2830		1280	