VKP 100

Centrifugal inline fans with backward curved blades

- Sound pressure level LpA at 3 m: 47
- Impeller type: Centrifugal impeller with backward curved blades
- Casing material: Coated steel
- Installation in any position

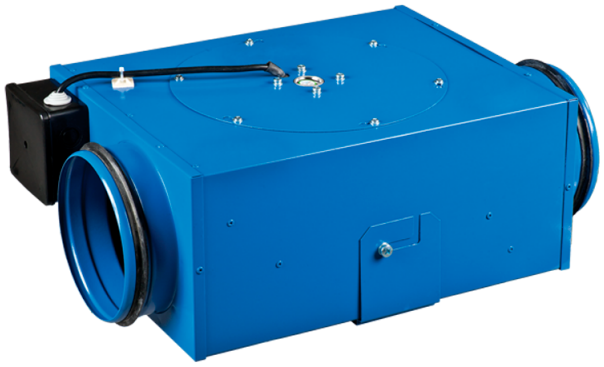

	Unit of measurement	VKP 100
Connected air duct size	mm	100
Phases	-	1
Minimum supply voltage	V	220
Maximum supply voltage	V	240
Power supply frequency	Hz	50/60
Rated power	W	58
Unit current	A	0.26
Maximum airflow	m^3/h	240
Rotation speed at 50hz	-	2500
Sound pressure level LpA at 3 m	dB(A)	47
Weight	kg	4.65
Transported air temperature (max)	°C	50
Transported air temperature (min)	°C	-25
Ingress protection rating	-	IPX4
Ingress protection rating of the drive	-	IP44
Impeller material	-	Plastic

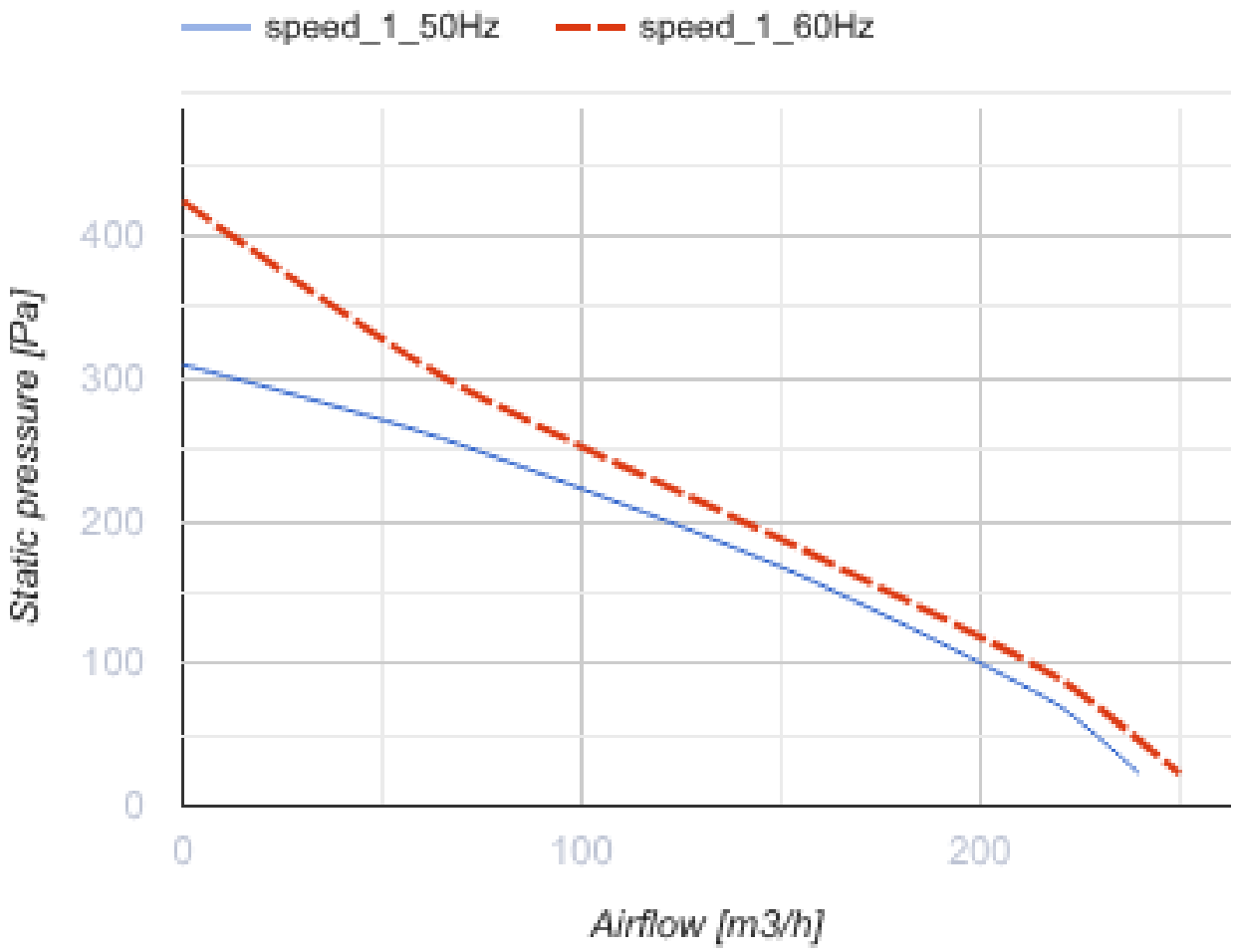

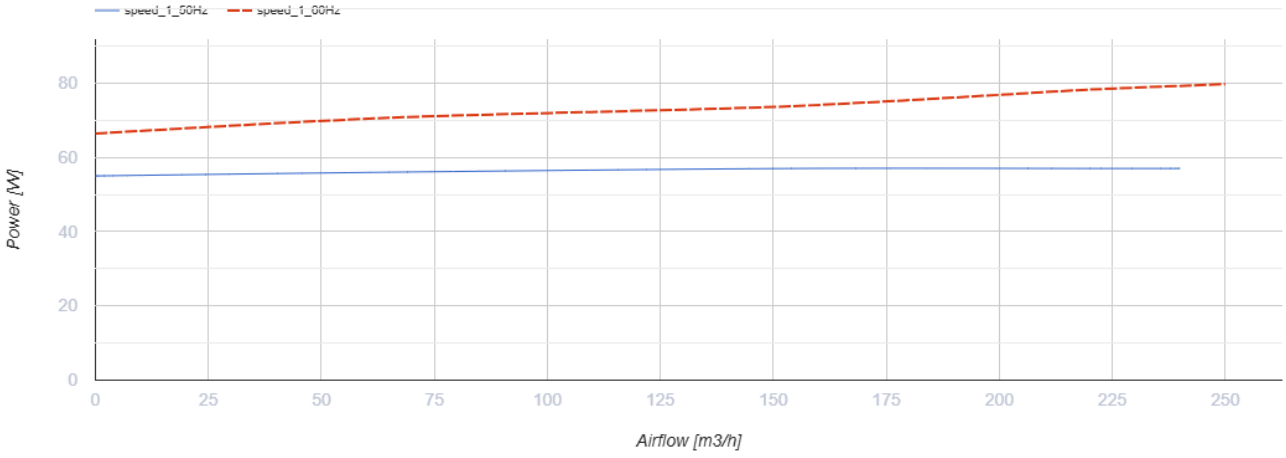

Dimensions

ØD	B	H	L	L2
99	252	133	420	321

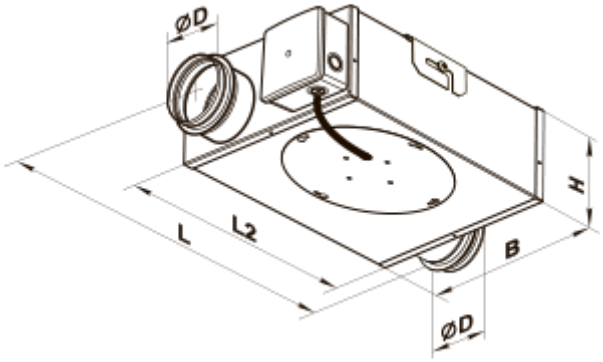
ØD
L
L2
B
H
ØD

Ecodesign

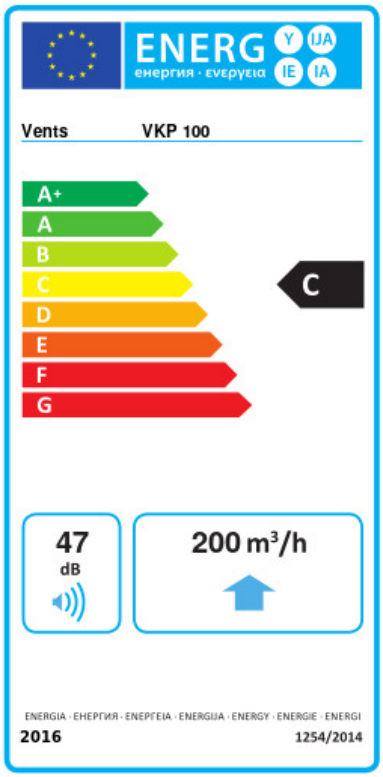

Trademark	Vents					
Model	VKP 100					
Specific energy consumption (SEC) (kWh/(m²/a))	Cold		Average		Warm	
	-52.3	A+	-25.3	C	-9.8	F
Type of ventilation unit	Unidirectional					
Type of drive installed	Variable speed					
Type of heat recovery system	None					
Maximum flow rate (m³/h)	200					
Electric power input (W)	58					
Reference flow rate (m³/s)	0.039					
Reference pressure difference (Pa)	50					
Specific power input (SPI) (W/(m³/h))	0.228					
Control typology	Local demand control					
Maximum external leakage rates (%)	2.7					
Declared typology	RVU UVU					
Sound power level (dB(A))	47					
The annual electricity consumption (AEC) (kWh/a)	Cold		Average		Warm	
	121		121		121	
The annual heating saved (AHS) (kWh/a)	Cold		Average		Warm	
	5536		2830		1280	