VKP 150

Centrifugal inline fans with backward curved blades

- Sound pressure level LpA at 3 m: 50
- Impeller type: Centrifugal impeller with backward curved blades
- Casing material: Coated steel
- Installation in any position

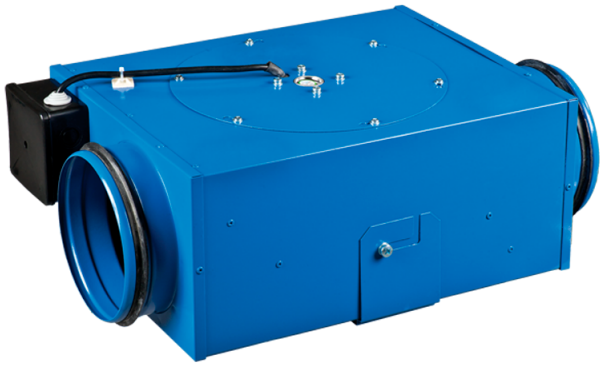

	Unit of measurement	VKP 150
Connected air duct size	mm	150
Phases	-	1
Minimum supply voltage	V	220
Maximum supply voltage	V	240
Power supply frequency	Hz	50/60
Rated power	W	85
Unit current	A	0.38
Maximum airflow	m^3/h	553
Rotation speed at 50hz	-	2600
Sound pressure level LpA at 3 m	dB(A)	50
Weight	kg	6.35
Transported air temperature (max)	°C	40
Transported air temperature (min)	°C	-25
Ingress protection rating	-	IPX4
Ingress protection rating of the drive	-	IP44
Impeller material	-	Plastic

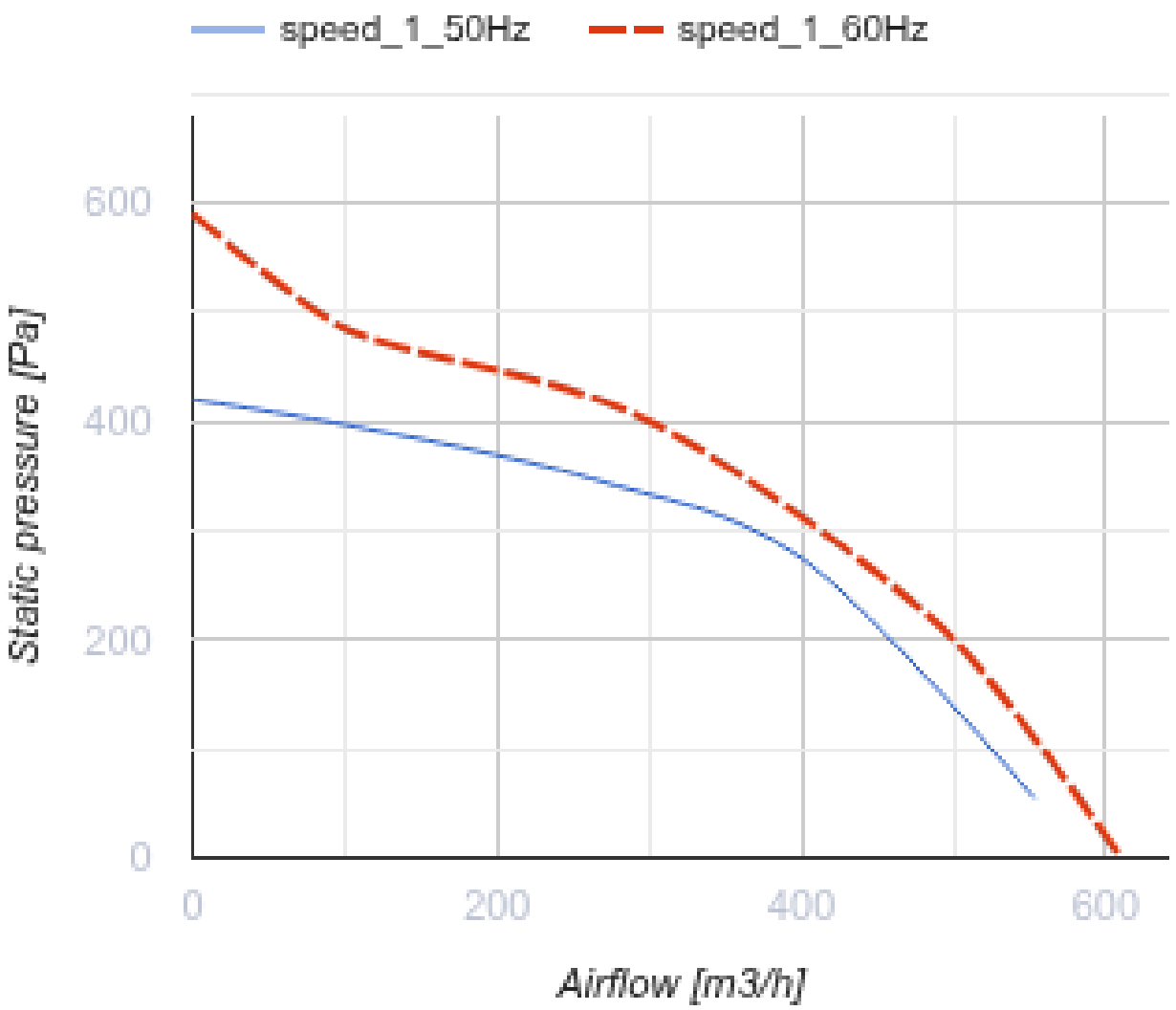
speed_1_50Hz
speed_1_60Hz
600
400
200
0
Static pressure [Pa]
0
200
400
600
Airflow [m3/h]

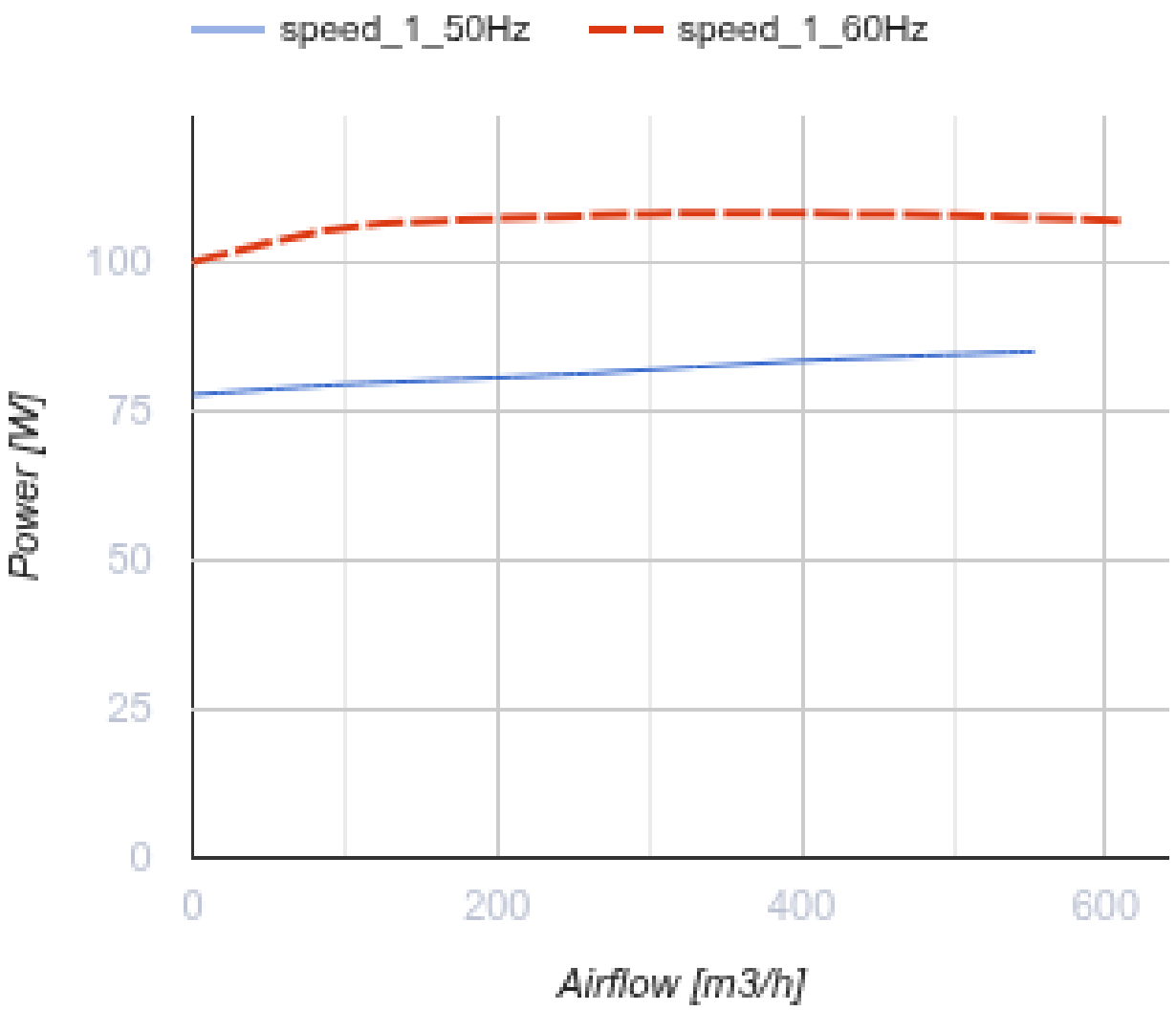

Dimensions

ØD	B	H	L	L2
149	305	170	480	382

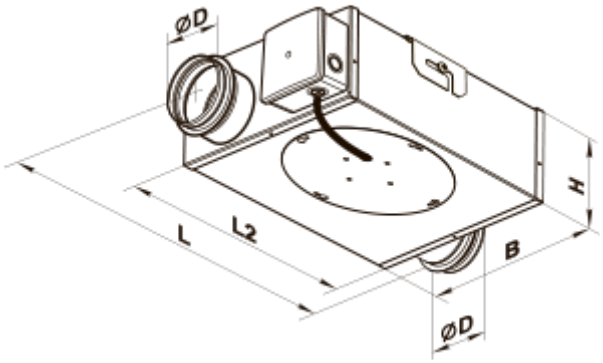

Ecodesign

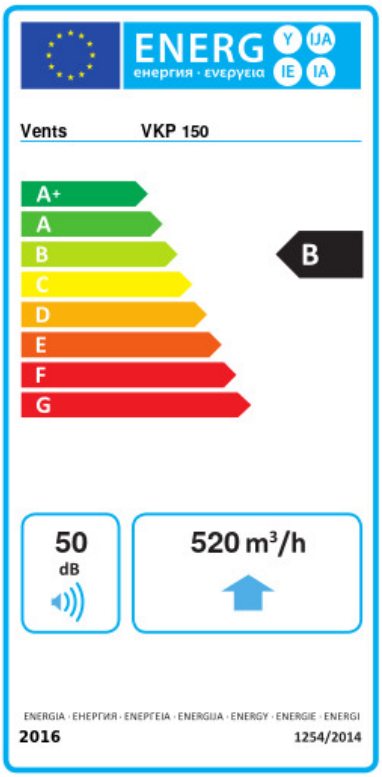

Trademark	Vents					
Model	VKP 150					
Specific energy consumption (SEC) (kWh/(m²/a))	Cold		Average		Warm	
	-53.7	A+	-26.6	B	-11.1	E
Type of ventilation unit	Unidirectional					
Type of drive installed	Variable speed					
Type of heat recovery system	None					
Maximum flow rate (m³/h)	520					
Electric power input (W)	85					
Reference flow rate (m³/s)	0.101					
Reference pressure difference (Pa)	50					
Specific power input (SPI) (W/(m³/h))	0.128					
Control typology	Local demand control					
Maximum external leakage rates (%)	2.7					
Declared typology	RVU UVU					
Sound power level (dB(A))	50					
The annual electricity consumption (AEC) (kWh/a)	Cold		Average		Warm	
	68		68		68	
The annual heating saved (AHS) (kWh/a)	Cold		Average		Warm	
	5536		2830		1280	