VKP 200 mini



Centrifugal inline fans

• Sound pressure level LpA at 3 m: 47
• Impeller type: Centrifugal impeller with forward curved blades
• Casing material: Coated steel
• Installation in any position

	Unit of measurement	VKP 200 mini
Connected air duct size	mm	200
Phases	-	1
Minimum supply voltage	V	230
Maximum supply voltage	V	230
Power supply frequency	Hz	50
Rated power	W	139
Unit current	A	0.61
Maximum airflow	m^3/h	783
Rotation speed at 50hz	-	950
Sound pressure level LpA at 3 m	dB(A)	47
Weight	kg	8.8
Transported air temperature (max)	°C	50
Ingress protection rating	-	IPX4
Ingress protection rating of the drive	-	IP44
Impeller material	-	Plastic

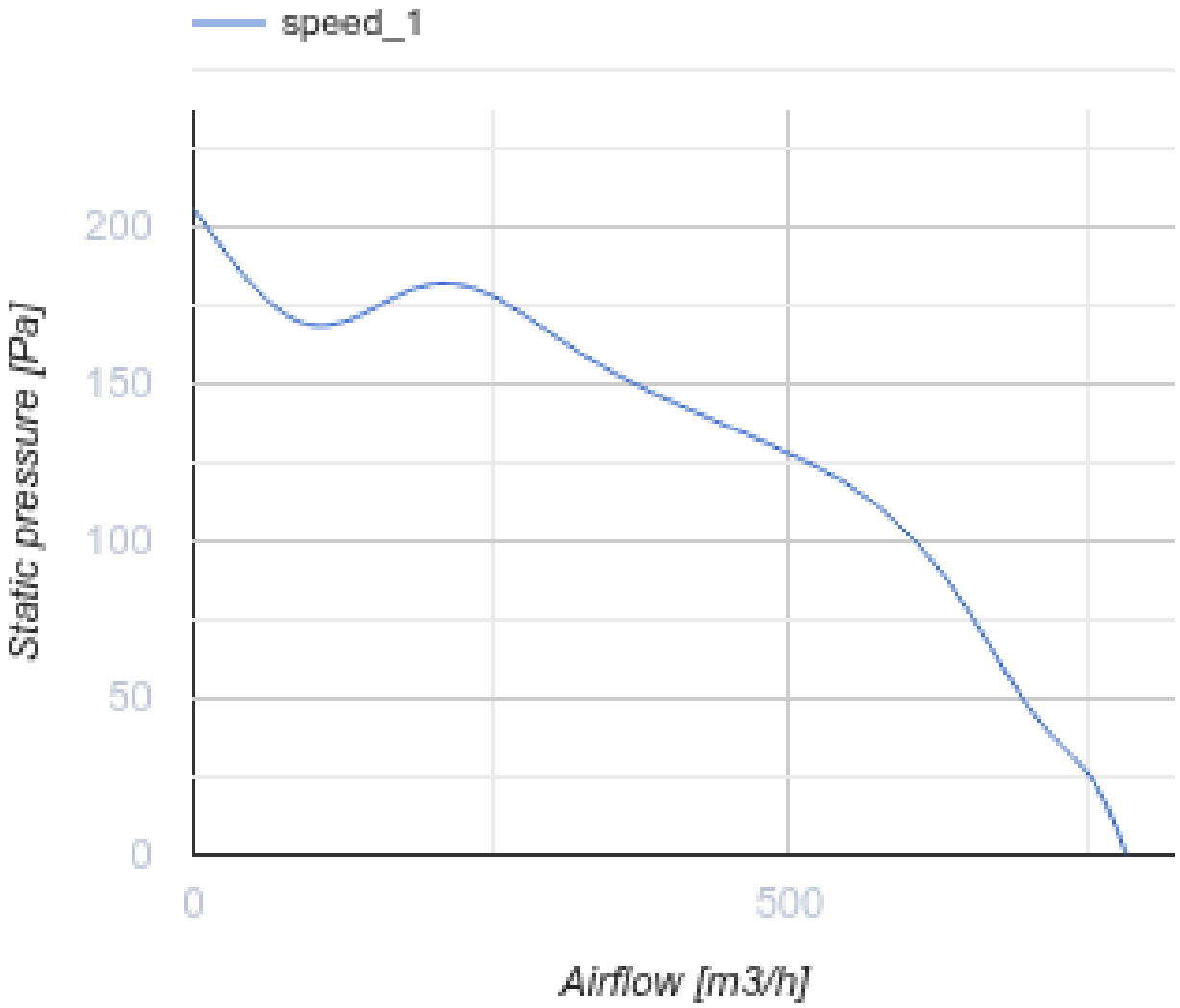
speed_1
200
150
100
50
0
Static pressure [Pa]
0
500
Airflow [m3/h]

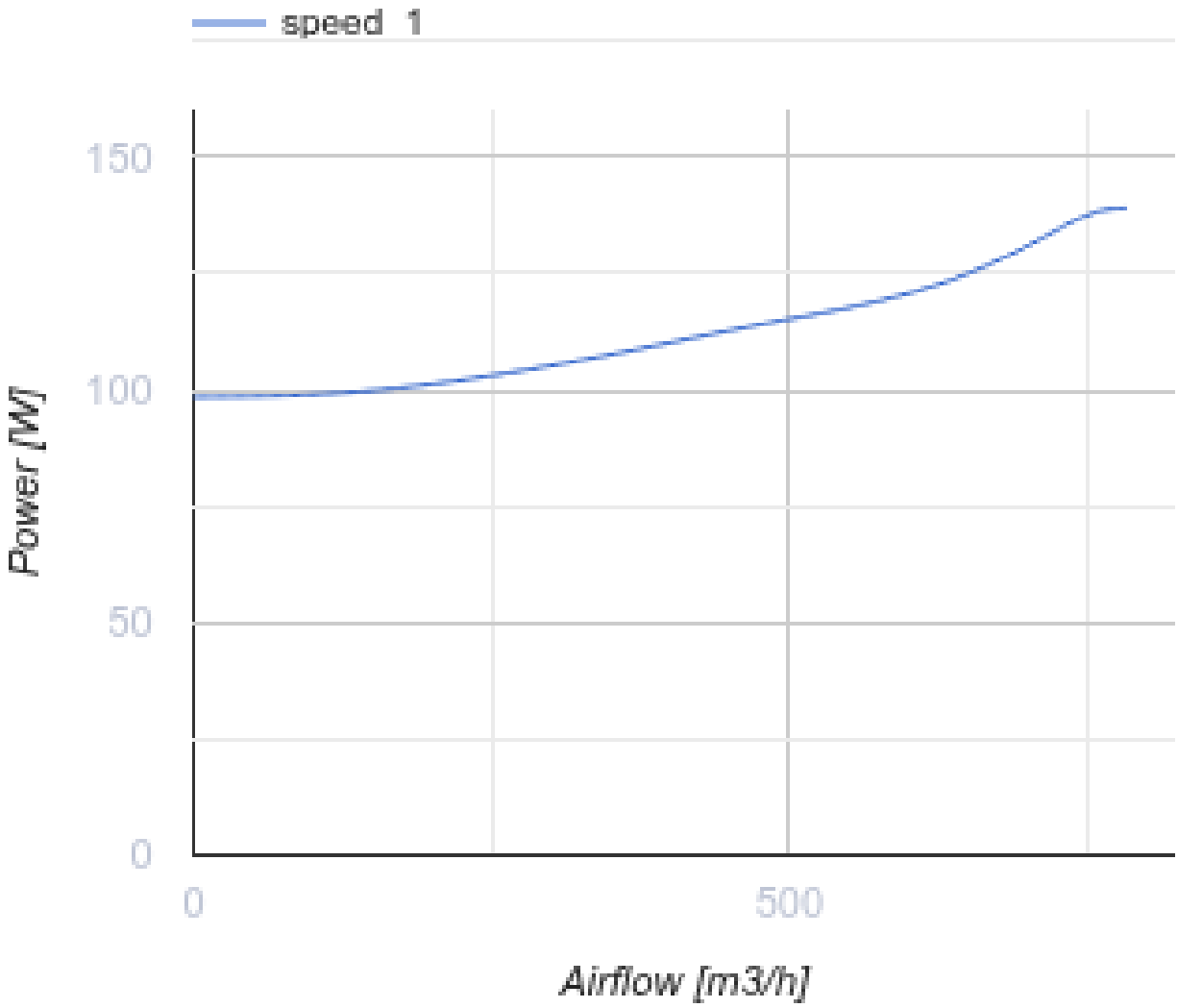

Dimensions

ØD	ØD1	B	H	L	L2
198	198	362	222	494	397

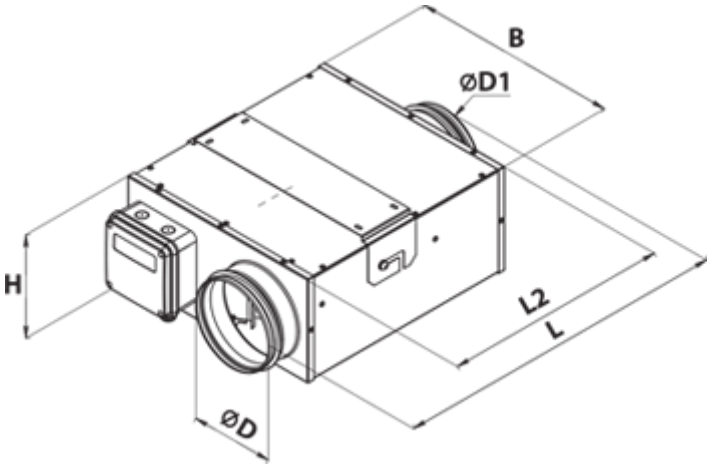
B
ØD1
H
L2
L
ØD

Ecodesign

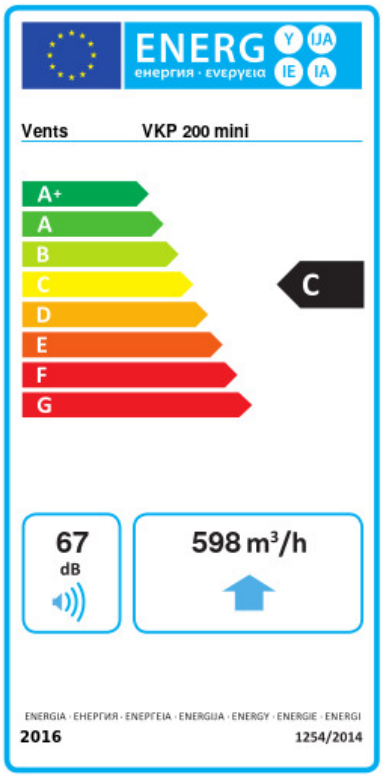

Trademark	Vents					
Model	VKP 200 mini					
Specific energy consumption (SEC) (kWh/(m²/a))	Cold		Average		Warm	
	-51.8	A+	-24.8	C	-9.3	F
Type of ventilation unit	Unidirectional					
Type of drive installed	Variable speed					
Type of heat recovery system	None					
Maximum flow rate (m³/h)	598					
Electric power input (W)	120					
Reference flow rate (m³/s)	0.116					
Reference pressure difference (Pa)	50					
Specific power input (SPI) (W/(m³/h))	0.268					
Control typology	Local demand control					
Maximum external leakage rates (%)	2.7					
Declared typology	RVU UVU					
Sound power level (dB(A))	67					
The annual electricity consumption (AEC) (kWh/a)	Cold		Average		Warm	
	142		142		142	
The annual heating saved (AHS) (kWh/a)	Cold		Average		Warm	
	5536		2830		1280	